Alle Rechte vorbehalten/ *All rights reserved*

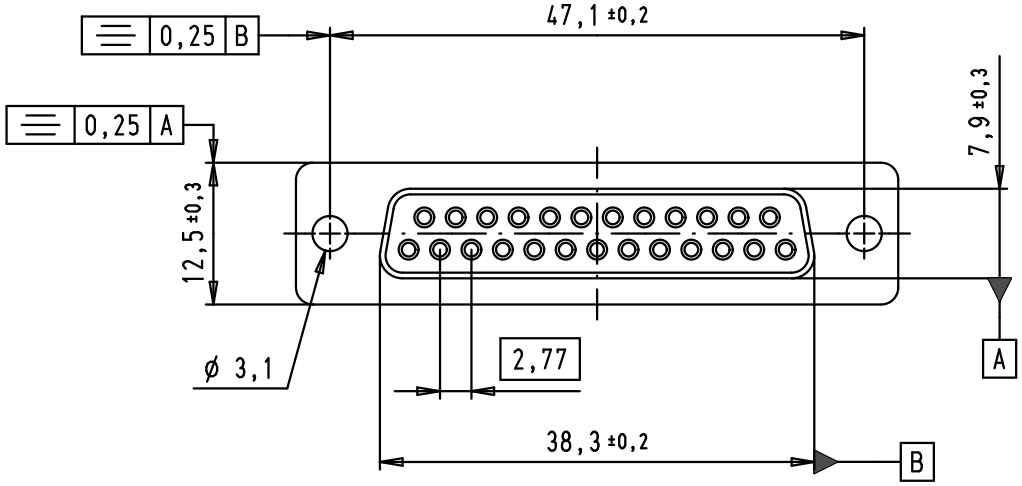


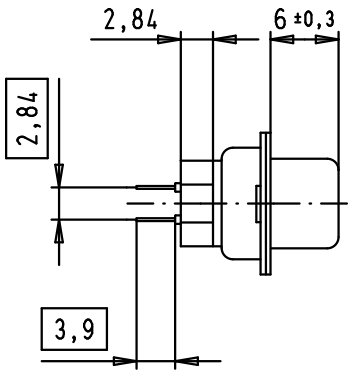


SPECIFICATIONS

| FREQUENCY (MHz) | ATTENUATION (dB) |
|---|---|
| 5 | 0,5 |
| 10 | 1 |
| 50 | 3,5 |
| 100 | 4 |
| 500 | 5 |
| 1000 | 5,5 |

| | |
|---|---|
| Operating voltage | < 250 V AC |
| Working current | < 7,5 A |
| Insulation resistance | > 1GΩ |
| Contact resistance | < 15 mΩ |
| Dielectric withstanding voltage | 500 V AC / minute |

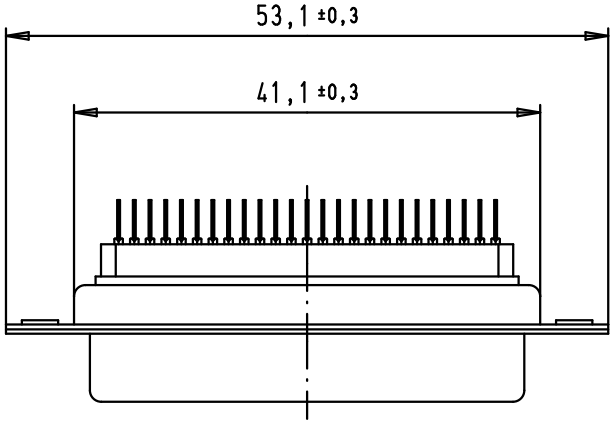


PCB layout, component side

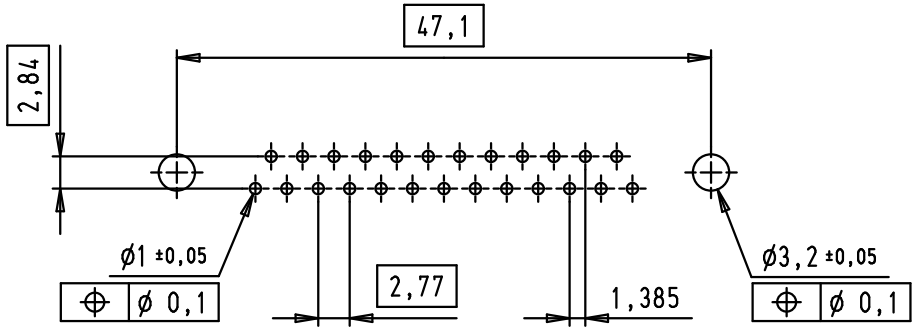


| | |
|---|---|
| 09 64 312 7800 | PL3 |
| Part number | Performance level |

| | | | | Dat. | Name |
|---|---|---|---|---|---|
| | | | Detail. | 11/06/09 | PK |
| | | | Insp. | | |
| | | | Stand. | | |
| 36160 | 22/09/10 | SC | | | |
| EC00332 | 11/06/09 | PK | | | |
| Mod. | Dat. | Name | | | |

All Dim. in mm
Orig. Size DIN A 4

D-Sub, female, straight, 25 poles, tin plated shell, solder pins, ferrite filter

Maßstab/ *Scale* 1,5:1

HARTING EURL
F-95972 Paris

TB 09 64 312 7800

Sub.

Blatt/ *Page* 1/1