Alle Rechte vorbehalten/ *All rights reserved*

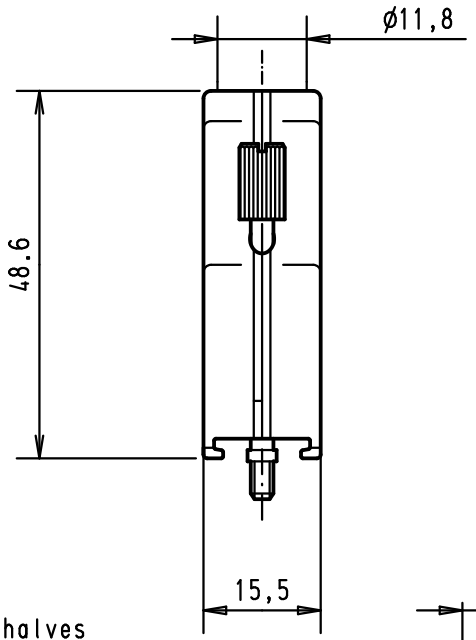

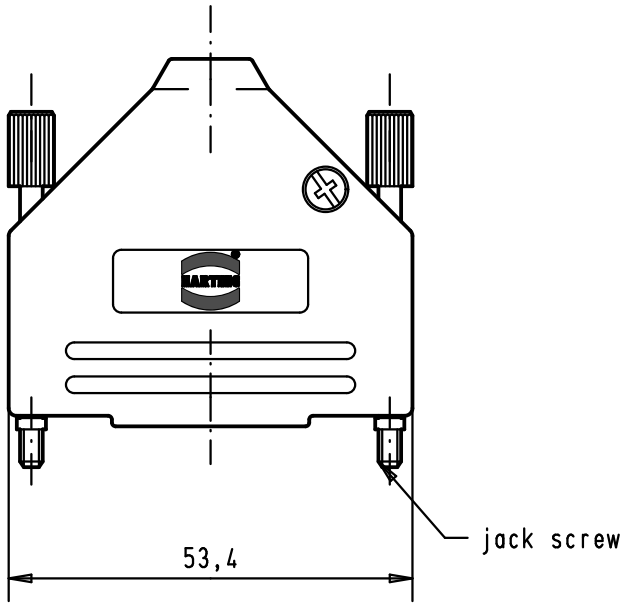

Grommet set halves

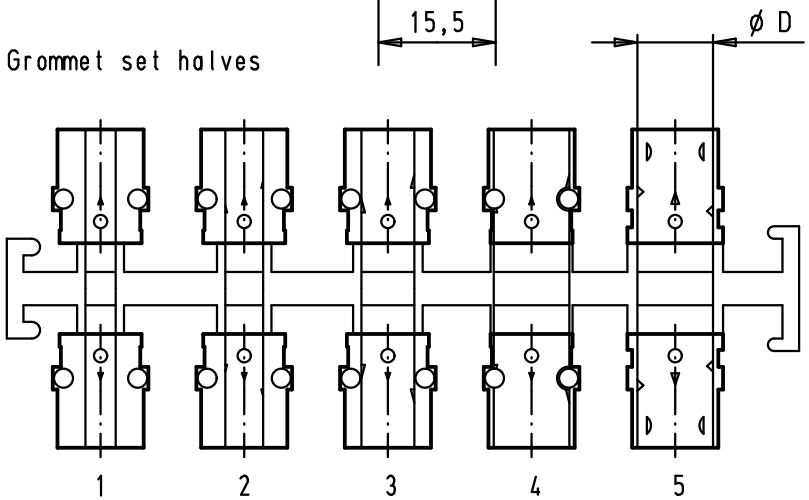

Grommet dimensions	
Number	Diameter D
1	4,0
2	5,0
3	7,0
4	10,0
5	10.2

09 67 025 0348	M3
09 67 025 0343	UNC 4-40
Part number	jack screw thread

EC01356	18/02/10	SC
32236	24/11/04	TR
Mod.	Dat.	Name

	Dat.	Name
Detail.	28-MAR-02	CV
Insp.		
Stand.		

All Dim. in mm
Orig. Size DIN A 4

HARTING EURL
F-95972 Paris

D-Sub hood 25 poles
top entry full metal
die cast

Maßstab/ *Scale* 1

TB 0967 025 034X

Sub. TB 09 67 025 0343

Blatt/ *Page* 1/1