MICRO SWITCH
A DIVISION OF MINNEAPOLIS-HONEYWELL REGULATOR COMPANY
FREEPORT, ILLINOIS
FED. MFR. CODE 91929

SWITCH-ENCLOSED

CATALOG LISTING
WZLN-2 RH

S

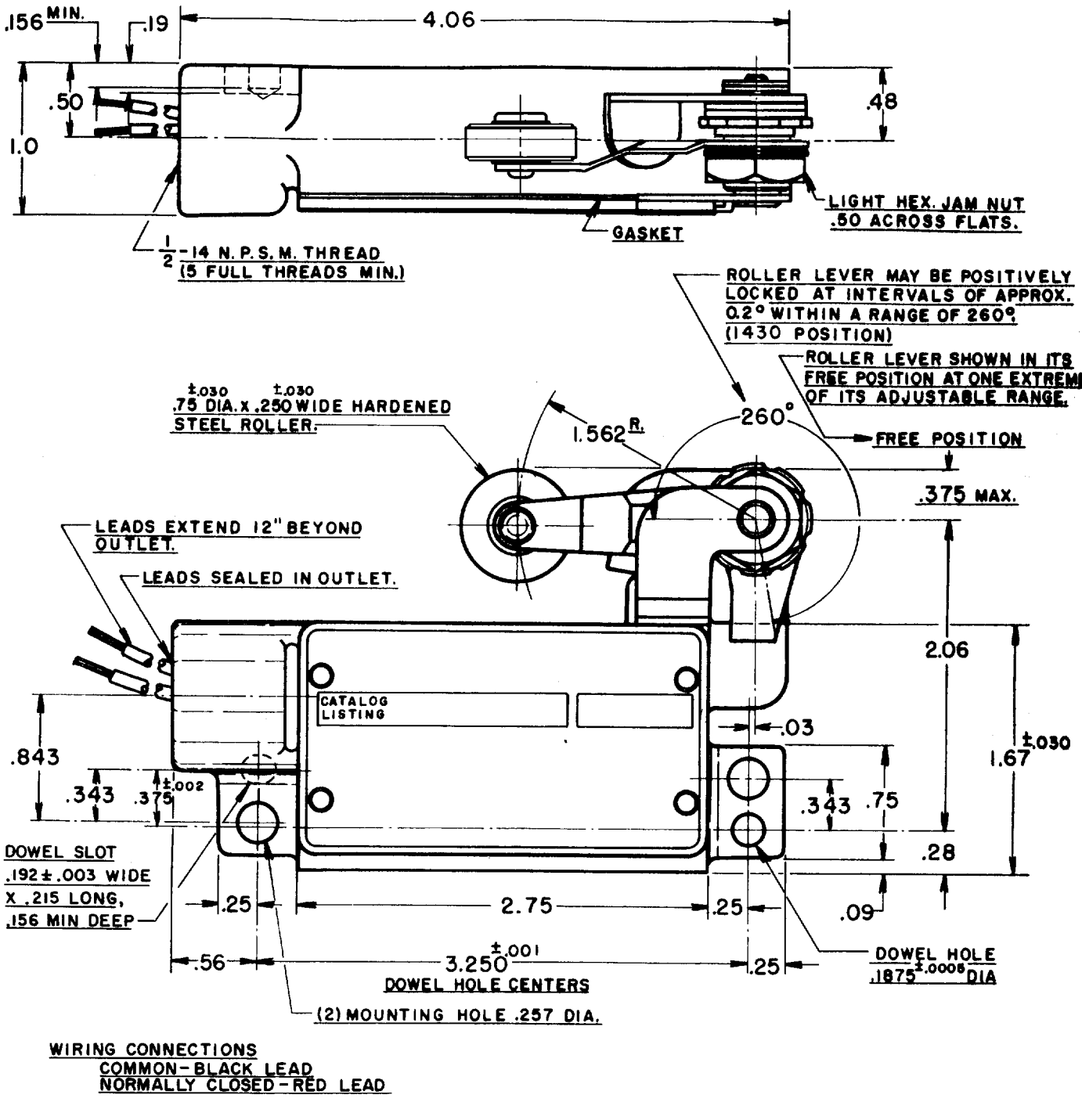

WIRING CONNECTIONS
COMMON-BLACK LEAD
NORMALLY CLOSED-RED LEAD

THIS DRAWING COVERS A PROPRIETARY ITEM AND IS THE PROPERTY OF MICRO SWITCH, A DIVISION OF HONEYWELL. THIS DRAWING IS NOT TO BE COPIED OR USED WITHOUT THE APPROVAL OF MICRO SWITCH.

CHARACTERISTICS

OPERATING FORCE - - - - - 3 LB. MAX.

RELEASE FORCE - - - - - - 1/4 LB. MIN.
PRETRAVEL - - - - - - - - (3°) .078 MAX.
DIFFERENTIAL TRAVEL - - (1/2°) .014 MAX.
OVERTRAVEL - - - - - - (17°) .469 MIN.

ELECTRICAL DATA

CONTACT ARRANGEMENT
S. P. N. C.

-L96- 15 A-125, 250, OR 480 VAC
1/2 A-125 VDC; 1/4 A-250 VDC
1/8 HP-125 VAC, 1/4 HP-250 VAC

SCALE FULL
DO NOT SCALE PRINT

UNLESS OTHERWISE SPECIFIED
DIMENSIONS ARE IN INCHES
TOLERANCES ARE:

ONE PLACE	(.0)	±.030
TWO PLACE	(.00)	±.015
THREE PLACE	(.000)	±.005
ANGLES		±

WEIGHT .850 LB. PLUS LEADS

(M) WZLN-2 RH ISSUE 6
REPLACES
RELEASE NO.
M WZLN-2 RH
DRAWING NUMBER
ISSUE 13

REVISIONS		
A	CO 8520	R.E.R. 18 OCT. 56
B	CO 17653	J A N 31 AUG 64
C	CO 11950	D A W 27 OCT 64
D	CO21551	W E G 10 JUNE 66
E	CO 50714	G J W 30 APR 82
F	CO 55988	M A M 31 OCT 84
G	CO81513B	J A K 13 MAR 97

CHECK R. S. C. 22 OCT. 56
CHECK S.C.H. 24 OCT. 56
CHECK 56
DRAWN R. E. R. 18 OCT. 56
FORMTEK