SHEET OF

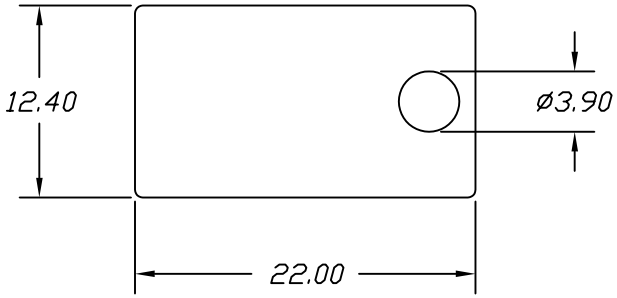

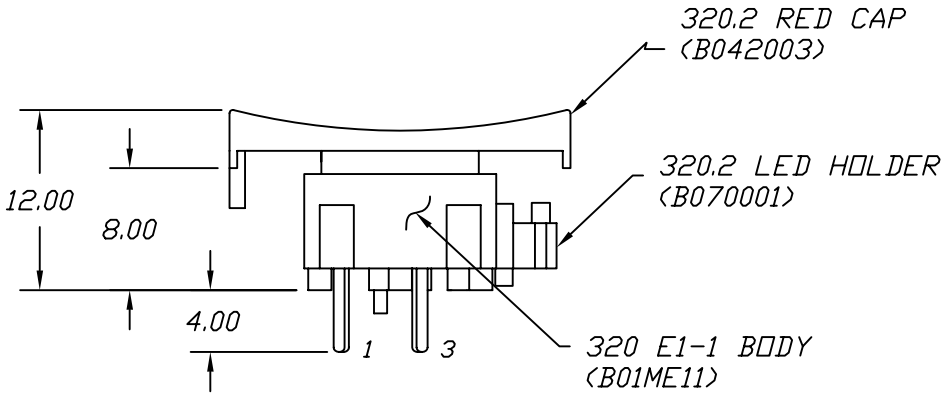

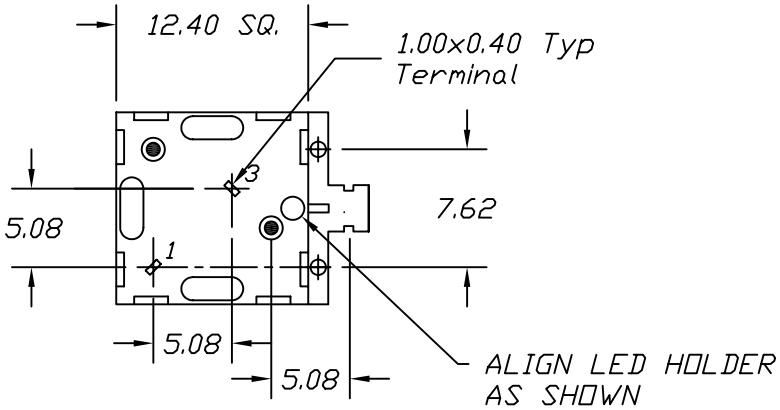

TOP VIEW -SHOW ORIENTATION OF LEGENDS
IN RESPECT TO THE PCB PIN TERMINALS.

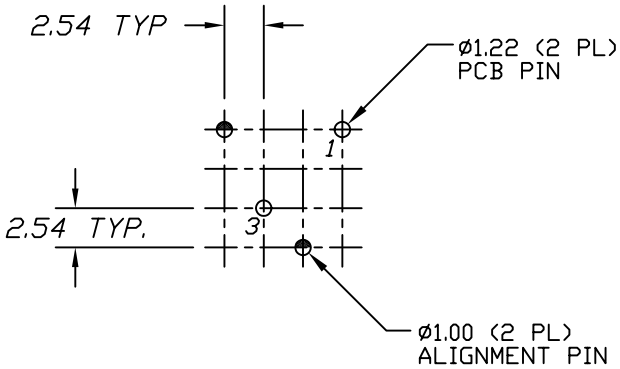

RECOMMENDED P.C.B. LAYOUT

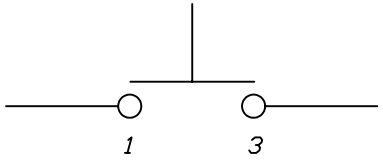

CIRCUIT: SPST
CONTACT CONFIGURATION

NOTES:

1. ALL DIMENSIONS IN MM
2. GENERAL TOLERANCE: 0.0=±0.4
   0.00=±0.25
3. TERM. NOS. FOR REF. ONLY
4. CONTACT RATING: 25mA/50V DC.
5. TRAVEL: 0.7mm
6. OPERATING FORCE: 120gf.
7. ▲ USES E1-1 CONTACT DOME (B050001)
8. 2002/95/EC (ROHS) COMPLIANT

REV.	ECN No.	DESCRIPTION	DATE	CHKD
A	17257	RELEASED FOR PRODUCTION	5/4/07	TN

THE INFORMATION CONTAINED IN THIS DOCUMENT IS PROPRIETARY TO E-SWITCH AND IS NOT TO BE COPIED OR TRANSFERRED

E-SWITCH™

TITLE				
320.2 E11 RED W/LED HOLDER				
SCALE	DATE	DR	DWG	REV
2:1	5/4/07	TN	XB0767A	A