MICRO SWITCH
FREEPORT ILLINOIS, U.S.A.
A DIVISION OF HONEYWELL
FED. MFG. CODE 91929

SWITCH — BASIC

BA-1R357

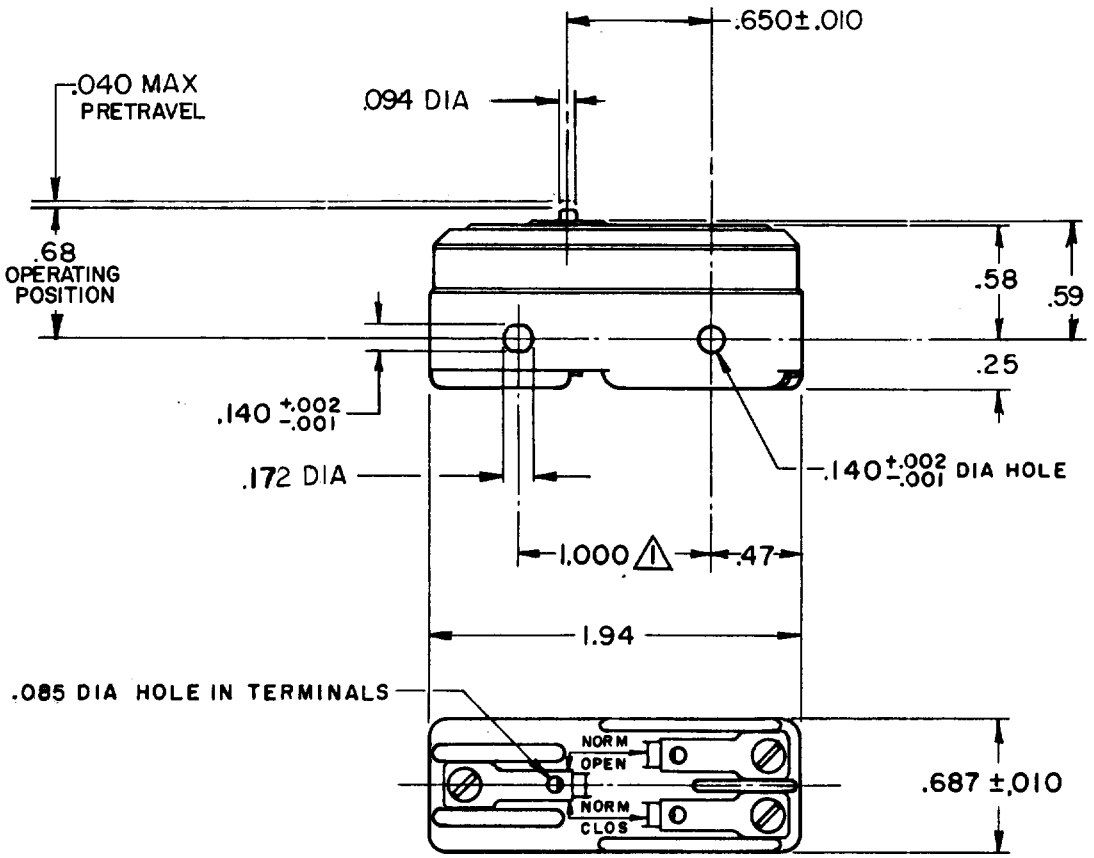

NOTE-
⚠-MOUNTING HOLES WILL ACCEPT PINS OR SCREWS OF .139 MAX. DIA. ON 1.000±.002 CENTERS

THIS DRAWING COVERS A PROPRIETARY ITEM AND IS THE PROPERTY OF MICRO SWITCH, A DIVISION OF HONEYWELL. THIS DRAWING IS NOT TO BE COPIED OR USED WITHOUT THE APPROVAL OF MICRO SWITCH.

THIRD ANGLE PROJECTION

CHARACTERISTICS	ELECTRICAL DATA
OPERATING FORCE------4 OZ. MAX	CONTACT ARRANGEMENT S. P. D. T.
DIFFERENTIAL FORCE----1 1/2 OZ. MAX	15A 125, 250 OR 480 VAC 1/2 HP 125 VAC, 1 HP 250 VAC 0.4 A 125 VDC, 0.2A 250 VDC
DIFFERENTIAL TRAVEL---.0004-.0010	
OVERTRAVEL--------.010 MIN	CODE L 208

SCALE FULL

DO NOT SCALE PRINT

TOLERANCES
APPLY TO DESIGN UNITS. CONVERSIONS ARE ONLY FOR REFERENCE. UNLESS NOTED, TOLERANCES ARE ±

	DIM. mm	TOL. mm/in	DIM. in	TOL. mm/in
NO PLACES	X	1/.04		
ONE PLACE	X.X	0.4/.016	X.X	0.8/.03
TWO PLACES	X.XX	0.15/.006	X.XX	0.38/.015
THREE PLACES			X.XXX	0.13/.005
ANGLES				

DESIGN UNITS SI METRIC ☐ US CUSTOMARY ■

WEIGHT .050 LB.

M BA-1R357 PAGE 1 OF 1
DRAWING NUMBER
ISSUE 9
RELEASE NO. PR-8312
REPLACES X69913-BA

REVISIONS		
A	C047128	J A P 8 FEB 80
B	C048371	WJM 18 SEP 80
C	CO 50166	T M M 8 SEP 81
D	C052068	J A P 22 OCT 82
E	CO 52591	T M M 22 MAR 83
F	C056061	TSK 7 DEC 84
G	CO 77590	SAD 9 JUN 94
H	CO-94212-C	DLT 20 SEP 99

CHECK 7 DEC 79 GJW
DRAWN
FORMTEK
FO-52848-A