MICRO SWITCH
a Honeywell Division
FED.MFG.CODE 91929

SWITCH - BASIC

CATALOG LISTING
BA-1RV543512-A2

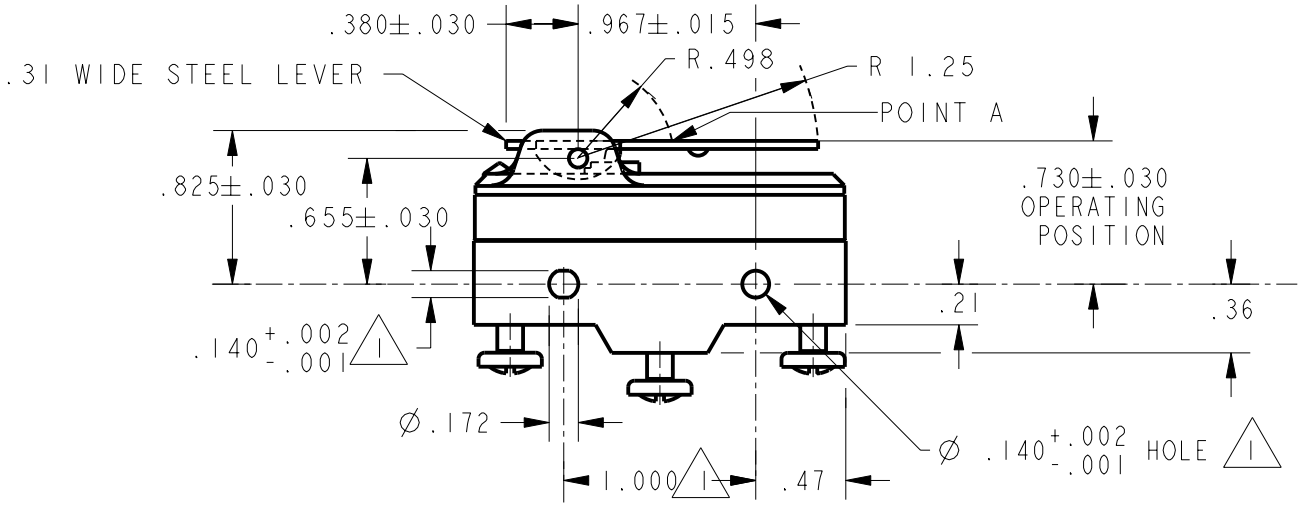

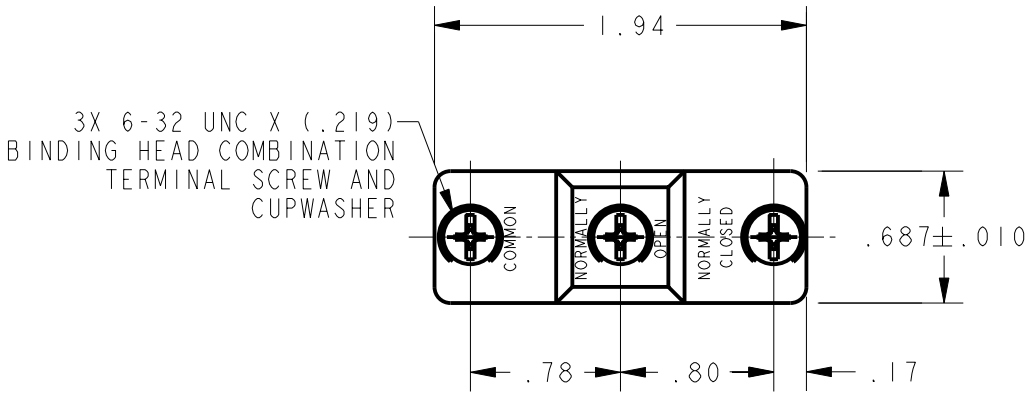

NOTE
(1) MOUNTING HOLES WILL ACCEPT PINS OR SCREWS OF Ø.139 MAX ON 1.000±.002 CENTERS

ANSI Y14.5M-1982 APPLIES

THIS DRAWING COVERS A PROPRIETARY ITEM AND IS THE PROPERTY OF MICRO SWITCH, A DIVISION OF HONEYWELL. THIS DRAWING IS NOT TO BE COPIED OR USED WITHOUT THE APPROVAL OF MICRO SWITCH.

THIRD ANGLE PROJECTION

CHARACTERISTICS AT POINT "A"	
OPERATING FORCE	5 OZ MAX
RELEASE FORCE	1 1/2 OZ MIN
PRETRAVEL	.109 MAX
DIFFERENTIAL TRAVEL	.011 MAX
OVERTRAVEL	.020 MIN

ELECTRICAL DATA

CONTACT ARRANGEMENT
S P D T

L65
15A 125, 250 OR 480 VAC
1/2 HP-125 VDC, 1 HP-250 VDC

L288
L299
L306
16A 250V ~ T85 5E4

SCALE FULL — DO NOT SCALE PRINT

UNLESS OTHERWISE SPECIFIED TOLERANCES ARE

ONE PLACE	(.0)	±.030
TWO PLACE	(.00)	±.015
THREE PLACE	(.000)	±.005
ANGLES		±

WEIGHT .063 LB

BA-1RV543512-A2
CATALOG LISTING
PAGE 1 OF 1
ISSUE 1
REPLACES XI14201-BA
RELEASE NO. 205067
CHECK
REVISIONS
CHECK
11 MAR 02
SAV
CHECK
11 MAR 02
GRT
DRAWN
PTC/CAD 2D