MICRO SWITCH
FREEPORT ILLINOIS, U.S.A
A DIVISION OF HONEYWELL
FED. MFG. CODE 91929

SWITCH-BASIC

CATALOG LISTING
BA-2R164-A4

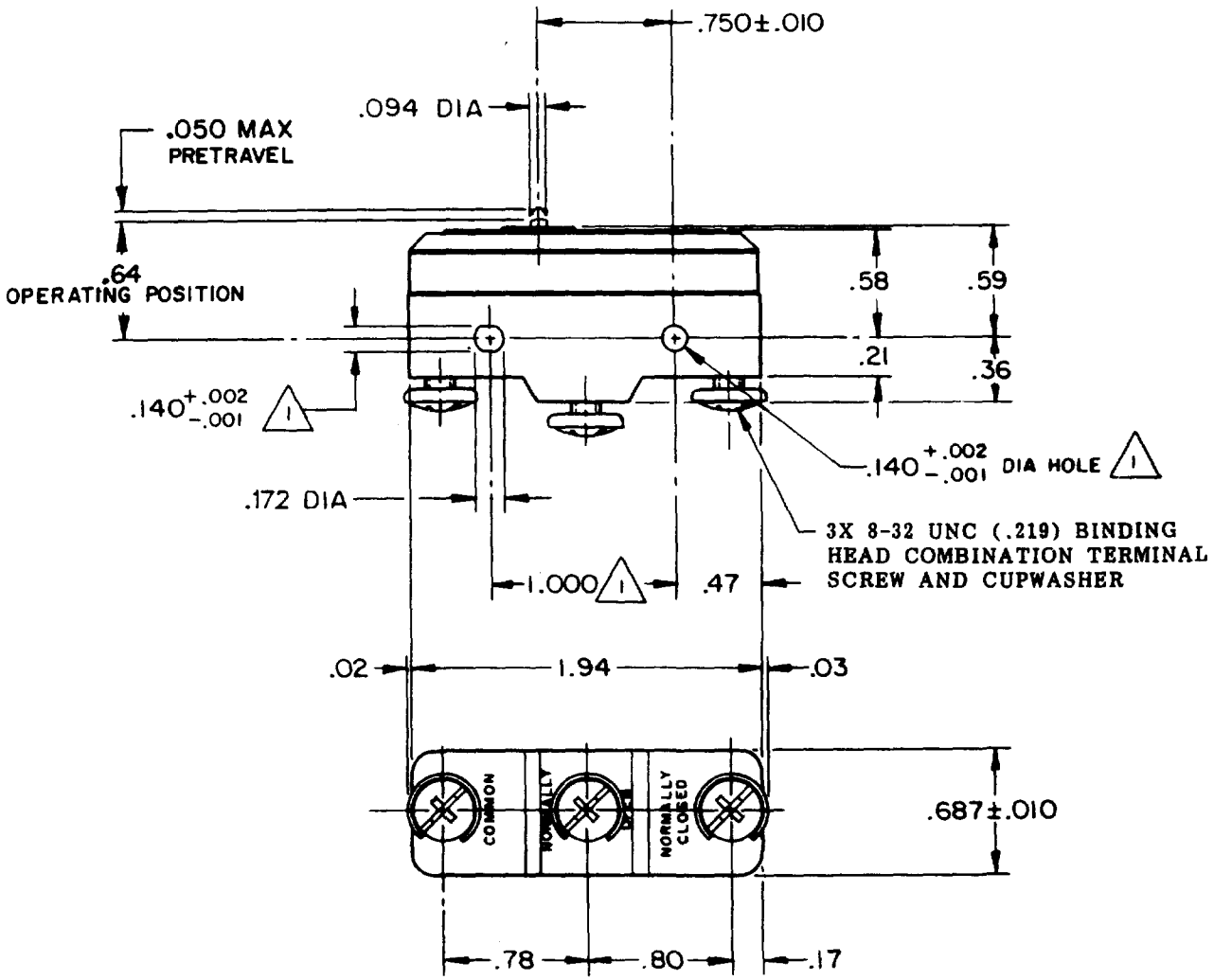

NOTE
1. MOUNTING HOLES WILL ACCEPT PINS OR SCREWS OF .139 MAX DIA ON 1.000±.002 CENTERS

THIS DRAWING COVERS A PROPRIETARY ITEM AND IS THE PROPERTY OF MICRO SWITCH, A DIVISION OF HONEYWELL. THIS DRAWING IS NOT TO BE COPIED OR USED WITHOUT THE APPROVAL OF MICRO SWITCH.

THIRD ANGLE PROJECTION

CHARACTERISTICS

OPERATING FORCE ------ 14-22 OZ

RELEASE FORCE ------ 10 OZ MIN

DIFFERENTIAL TRAVEL ---.005-.007

OVERTRAVEL ------ .010 MIN

ELECTRICAL DATA

CONTACT ARRANGEMENT
S P D T

UL LISTED – FILE E12252
CODE L145 20A-125, 250, 480VAC
1HP-125VAC; 2HP-250VAC
10A-125VAC "L"; 2A-600VAC
1/2A-125VDC; 1/4A-250VDC

L288
L299
L308

20(3)A 250V ~ T85 5E4

SCALE FULL

DO NOT SCALE PRINT

TOLERANCES
APPLY TO DESIGN UNITS. CONVERSIONS ARE ONLY FOR REFERENCE. UNLESS NOTED, TOLERANCES ARE ±

	DIM. mm	TOL. mm/in	DIM. in	TOL. mm/in
NO PLACES	X	1/.04		
ONE PLACE	X.X	0.4/.016	X.X	0.8/.03
TWO PLACES	X.XX	0.15/.006	X.XX	0.38/.015
THREE PLACES			X.XXX	0.13/.005
ANGLES				

DESIGN UNITS SI METRIC ☐ US CUSTOMARY ■

WEIGHT .063 LB

BA-2R164-A4 PAGE 1 OF 1
RELEASE NO. PR-5616
REPLACES
DRAWING NUMBER 4
ISSUE

REVISIONS
A CO-73267-G J A L 20 OCT 93
B CO-77588 K D R 29 MAR 94
C C093346 D L T 23 SEP 98

CHECK
CHECK
17 FEB 76
CEB
CHECK
FEB 76
13
DRAWN J A L

FORMTEK
FO-52848-A