MICRO SWITCH
A DIVISION OF MINNEAPOLIS-HONEYWELL REGULATOR COMPANY
FREEPORT, ILLINOIS
FED. MFR. CODE 91929

SWITCH—ENCLOSED

CATALOG LISTING
BAFI-3CNXI

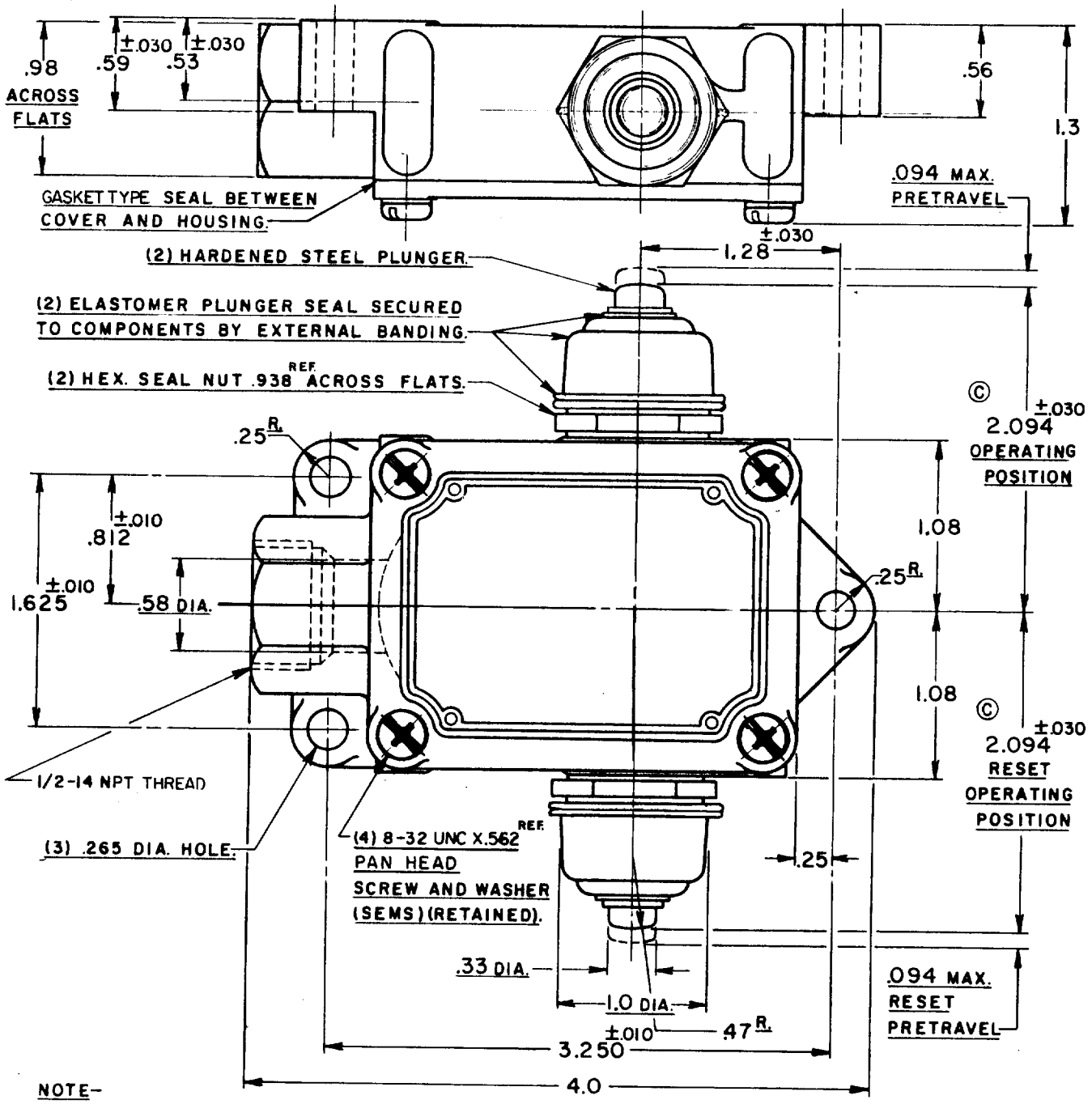

NOTE—

1-6-32 NC X .218 REF. BINDER HEAD TERMINAL SCREWS (STAKED).

THIS DRAWING COVERS A PROPRIETARY ITEM AND IS THE PROPERTY OF MICRO SWITCH, A DIVISION OF HONEYWELL. THIS DRAWING IS NOT TO BE COPIED OR USED WITHOUT THE APPROVAL OF MICRO SWITCH.

CHARACTERISTICS (BOTH PLUNGERS)

OPERATING FORCE — — — 1 1/2 LBS. MAX.

OVERTRAVEL — — — — — — .219 MIN.

SWITCH—BASIC REPLACEMENT—BA-3CX716

ELECTRICAL DATA

CONTACT ARRANGEMENT	BREAK DISTANCE
SINGLE POLE DOUBLE THROW MAINTAINED CONTACT	.036 MIN.

CODE L19 15A-125, 250 OR 480 VAC
3/4HP-125 VAC; 1 1/2HP-250 VAC
1/2A-125 VDC; 1/4A-250 VDC

SCALE—FULL

DO NOT SCALE PRINT

UNLESS OTHERWISE SPECIFIED
DIMENSIONS ARE IN INCHES

TOLERANCES ARE:

ONE PLACE	(.0)	±.030
TWO PLACE	(.00)	±.015
THREE PLACE	(.000)	±.005
ANGLES		±

WEIGHT

(M) BAFI-3CNXI ISSUE 3 REPLACES

BAFI-3CNXI

M RELEASE NO.

DRAWING NUMBER

ISSUE

B	B	13	2 OCT 57
X	B		
B	X		RSC

CHECK

REVISIONS

A	C.O. 8520	K. A. F. 27 SEPT. 57	1 OCT. 57
B	C.O. 12187	K. L. B. 21 OCT. 57	
C	C.O. 12283	O. M. W. 12 NOV. 57	ABL
D	C.O. 12445	J. E. C. 7 JAN. 58	CHECK
E	CO 17653	H B W 12 NOV 64	
F	CO46992	J A P 30 SEPT 80	2 Aug 57
G	CO51000-B	K A G 25 AUG 83	
H	CO54997-T	CJH 21 OCT 85	C.C.N.
J	CO72788	G J W 22 AUG 92	CHECK
K	CO 77179-E	DLT 17 MAY 94	

DRAWN K. A. F. 27 SEPT. 57

FO-80378