BS,C ,201578,004	B

GEN. ST.	01	02	03	04	05	06	07	08	0D	50	60	70	80	90
INT. ST.	10 11	12 13	14 18	20 31	32 33	34 38	39 40	42 43	44 45	46 48	56 70	72 73 ~~75~~	76 81 ~~82~~	83 84 88

REV.	DATE	DESCRIPTION	BY	C'K'D'
A	24-09-01	CONVERSION REVISION 04	KN	
B	24-10-01	B10074	MF	

HM2SC22B(V1)

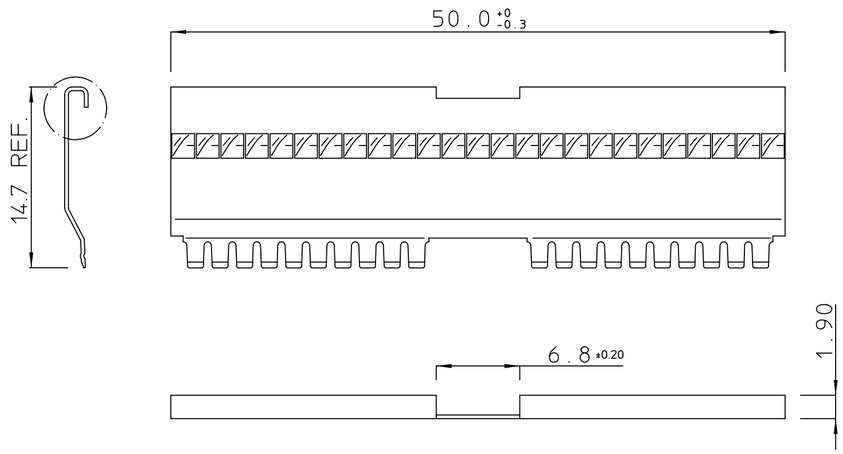

HM2SC25B(V1)

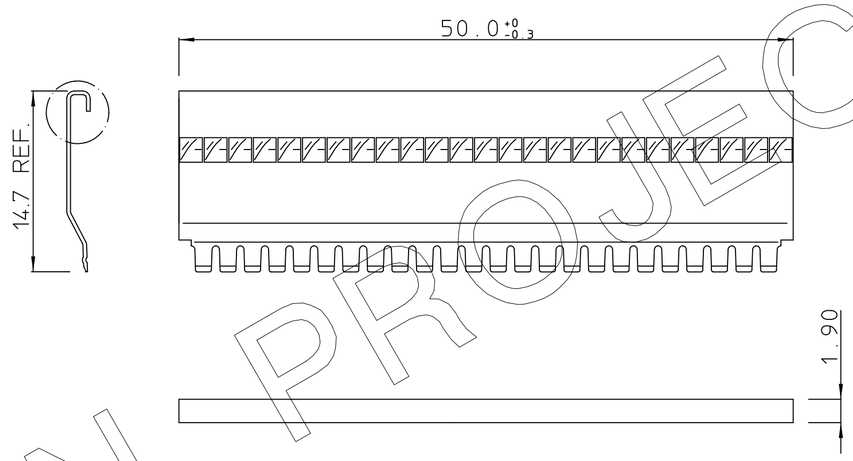

HM2SC11B(V1)

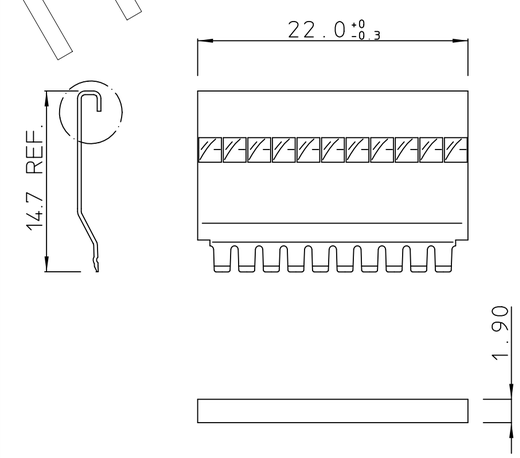

DETAIL

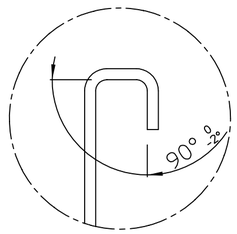

NOTES:

1. MAKE SURE TO USE THE ACCORDING SHIELDING COVER FOR THE RECEPTACLE CONNECTORS:
   - HM2SC22B(V1) FOR TYPE A
   - HM2SC25B(V1) FOR TYPE B
   - HM2SC11B(V1) FOR TYPE C
   - HM2SC11B(V1) FOR TYPE M
   - HM2SC11B(V1) FOR TYPE D
2. PCB RANGE : 2.4 - 3.5 mm MAX.

EUROPEAN PROJECTION

THIS IS OUR EXCLUSIVE PROPERTY. IT IS NOT TO BE COPIED, REPRINTED OR DISCLOSED TO A THIRD PARTY, NOR USED FOR MANUFACTURING WITHOUT OUR WRITTEN CONSENT, AND HAS TO BE RETURNED TO US IN CASE OF NO USAGE

DIT IS ONZE EIGENDOM EN MAG NOCH NAGEMAAKT, HERDRUKT, OVERGEMAAKT AAN DERDEN, NOCH VOOR FABRIKATIE GEBRUIKT WORDEN, ZONDER ONZE SCHRIFTELIJKE TOELATING. BIJ NIET GEBRUIK IS TERUGZENDING VERPLICHT.

1DEC ±0,2 1DEC
2DEC ±0,1 2DEC
ANGLES ±1° HOEKEN

WE RESERVE THE RIGHT TO CHANGE DIMENSIONS OR REQUIREMENTS WITHOUT PRIOR NOTICE.

ALL DIMENSIONS IN MM

ALLE AFMETINGEN IN MM

APPR.	DATE	SIGN.
DRAFT	130193	W.Panis
CHECKED		
PROD. MGR.		
PR.ENG.MGR.		
PR.MGT.MGR.		

REFERENCES / REFERENTIES

MPACS 5+2R RA RCP SHIELDING COVER

CAT. No. HM2SC--B(V1)

FCI MECHELEN N.V.
A. SPINOYSTRAAT 8, 2800 MECHELEN

SCALE

BS,C ,201578,004 — DRAWING No.

CUSTOMER DRAWING

B — REVISION