MICRO SWITCH
a Honeywell Division
FED.MFG.CODE 91929

SWITCH - BASIC

CATALOG LISTING
BZ-1R2448-A2

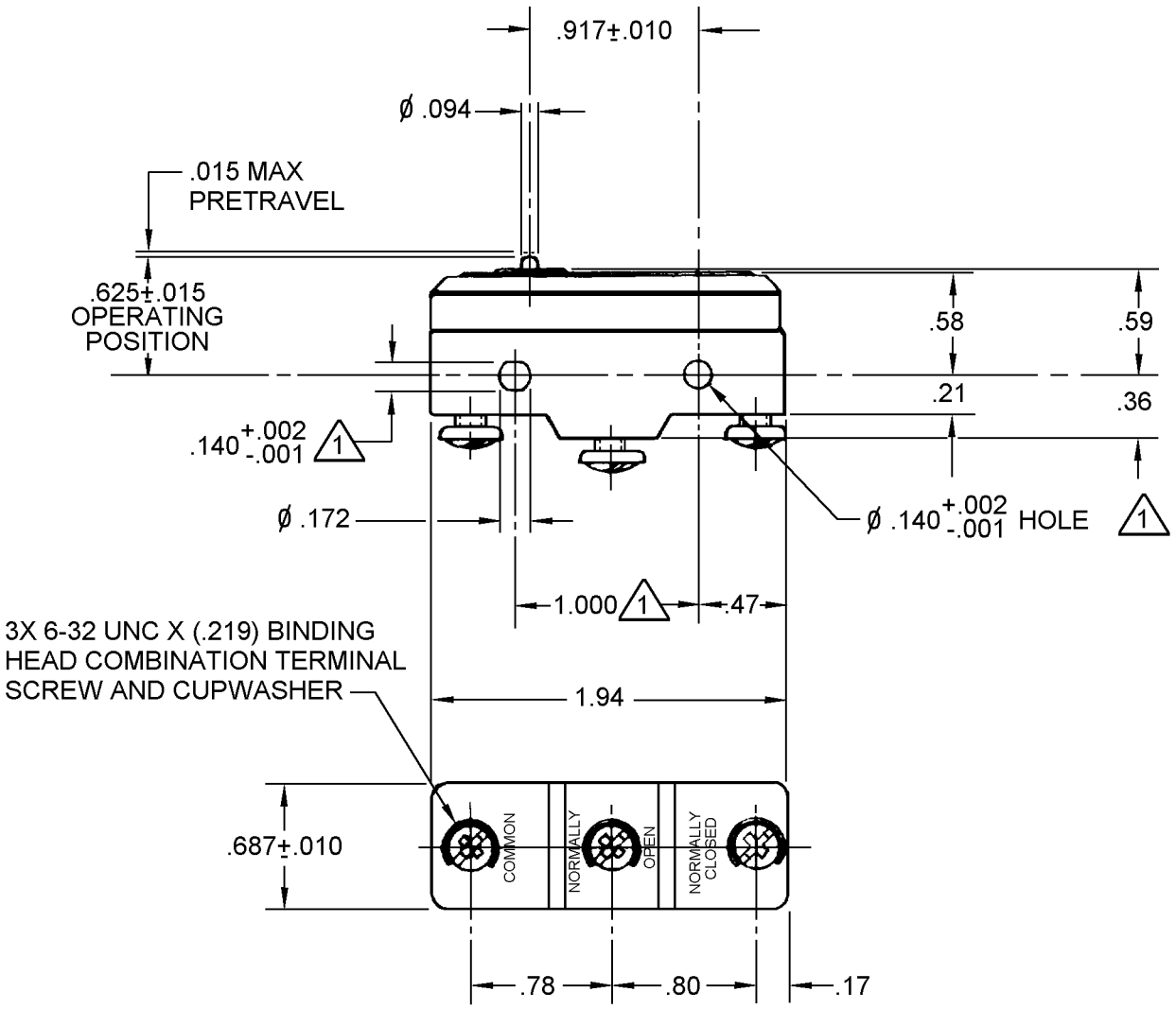

NOTES
1. MOUNTING HOLES WILL ACCEPT PINS OR SCREWS OF ø .139 MAX ON 1.000±.002 CENTERS
2 - SWITCH WILL WITHSTAND TEMPERATURE OF 400° F FOR 100 HOURS

ANSI Y14.5M–1982 APPLIES

THIS DRAWING COVERS A PROPRIETARY ITEM AND IS THE PROPERTY OF MICRO SWITCH, A DIVISION OF HONEYWELL. THIS DRAWING IS NOT TO BE COPIED OR USED WITHOUT THE APPROVAL OF MICRO SWITCH.

THIRD ANGLE PROJECTION

CHARACTERISTICS	ELECTRICAL DATA	SCALE FULL — DO NOT SCALE PRINT
OPERATING FORCE - - - - - 4 - 10 OZ	CONTACT ARRANGEMENT S P D T	UNLESS OTHERWISE SPECIFIED TOLERANCES ARE
RELEASE FORCE - - - - - - 2 1/2 OZ MIN		ONE PLACE (.0) ±.030
DIFFERENTIAL TRAVEL - - - .001 MAX	L35 5A 125, 250 OR 480 VAC 1/2A 125 VDC, 1/4A 250 VDC	TWO PLACE (.00) ±.015
OVERTRAVEL - - - - - - - .005 MIN		THREE PLACE (.000) ±.005
	L288 CE UL CSA	ANGLES ±
		WEIGHT .063 LB

X114132-BZ REPLACES
204842 RELEASE NO.
CATALOG LISTING BZ-1R2448-A2 PAGE 1 OF 1
M
ISSUE 1
CHECK
REVISIONS
CHECK
7 FEB 02
SAV
CHECK
7 FEB 02
CSL
DRAWN
RASTER