**MICRO SWITCH**
FREEPORT ILLINOIS, U.S.A
A DIVISION OF HONEYWELL
FED. MFG. CODE 91929

# SWITCH – BASIC

CATALOG LISTING
**BZ-2RD-D6**

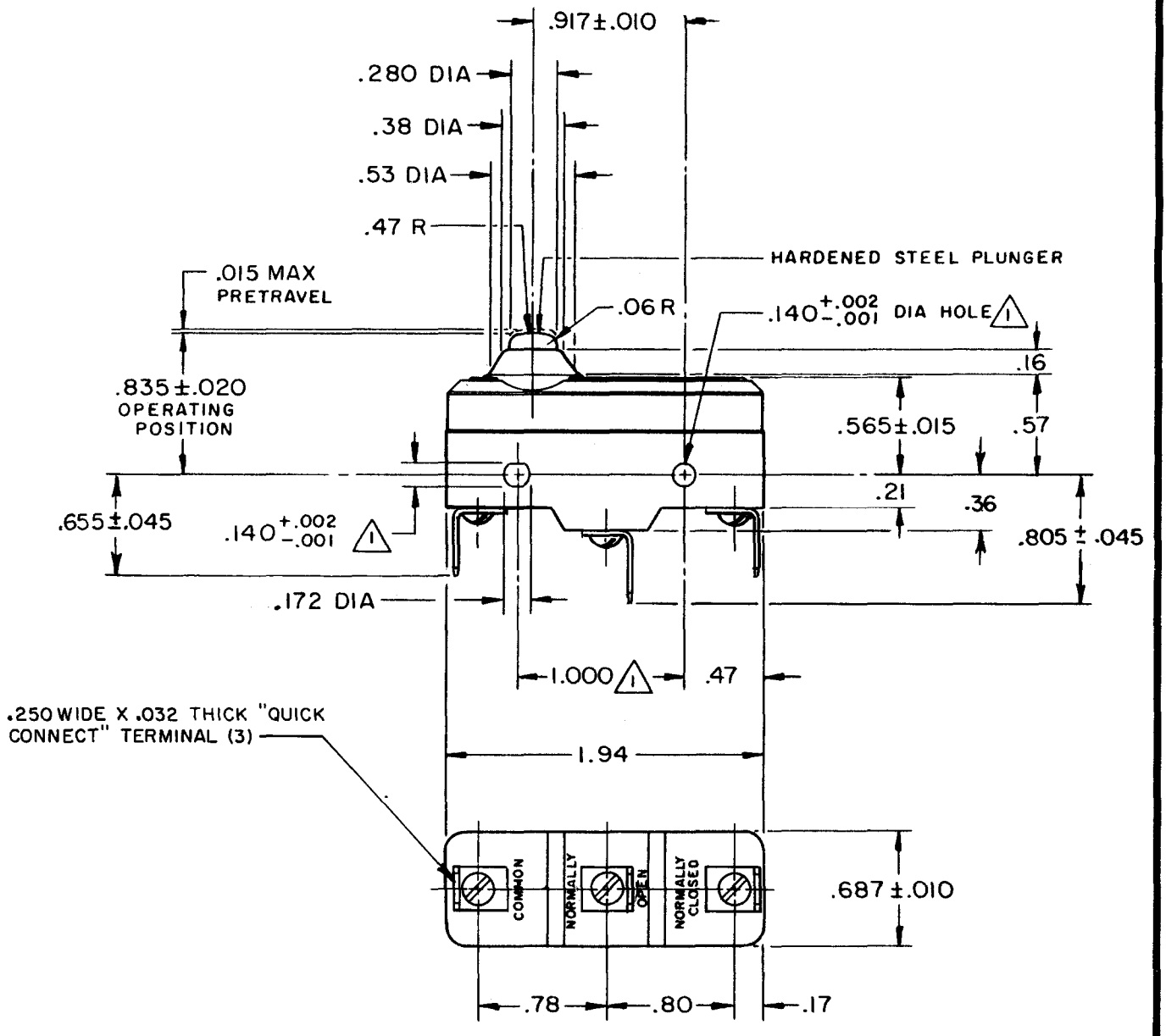


NOTE
1 MOUNTING HOLES WILL ACCEPT PINS OR SCREWS OF .139 MAX DIA ON 1.000±.002 CENTERS

THIS DRAWING COVERS A PROPRIETARY ITEM AND IS THE PROPERTY OF MICRO SWITCH, A DIVISION OF HONEYWELL. THIS DRAWING IS NOT TO BE COPIED OR USED WITHOUT THE APPROVAL OF MICRO SWITCH.

## CHARACTERISTICS

OPERATING FORCE – – – – – – – 9–13 OZ

RELEASE FORCE – – – – – – – 4 OZ MIN

DIFFERENTIAL TRAVEL – – –.0004–.0020

OVERTRAVEL – – – – – – – – .060 MIN

## ELECTRICAL DATA

CONTACT ARRANGEMENT
S P D T

UNDERWRITERS' LAB. INC. LISTED RATING
–L96– 15A-125, 250 OR 480 VAC
1/8HP-125 VAC; 1/4HP-250 VAC
1/2A-125 VDC; 1/4A-250 VDC

-L288-
-L299-
-L306-
16A 250V ~ T85 5E4

SCALE FULL
DO NOT SCALE PRINT

UNLESS OTHERWISE NOTED
DIMENSIONS ARE IN INCHES
**TOLERANCES ARE**

| | | |
|---|---|---|
| ONE PLACE | (.0) | ±.030 |
| TWO PLACE | (.00) | ±.015 |
| THREE PLACE | (.000) | ±.005 |
| ANGLES | | ± |

WEIGHT .064 LB

M BZ-2RD-D6
PAGE 1 OF 1
RELEASE NO. PR-3375
REPLACES
DRAWING NUMBER
ISSUE 4
CHECK

REVISIONS
A CO-77589 J A L 30 MAR 94
B CO 80938 DLT 9 JUN 95
C C093346 DLT 8 SEP 98

CHECK
23 MAY 73
LSD
CHECK
73
22 MAY 73
R E R
DRAWN
FORMTEK
FO-52848