MICRO SWITCH
FREEPORT ILLINOIS U.S.A.
A DIVISION OF HONEYWELL
FED. MFG. CODE 91928

SWITCH-BASIC

BZ-2RQ24-D5

PRODUCT CODE
ALH3650

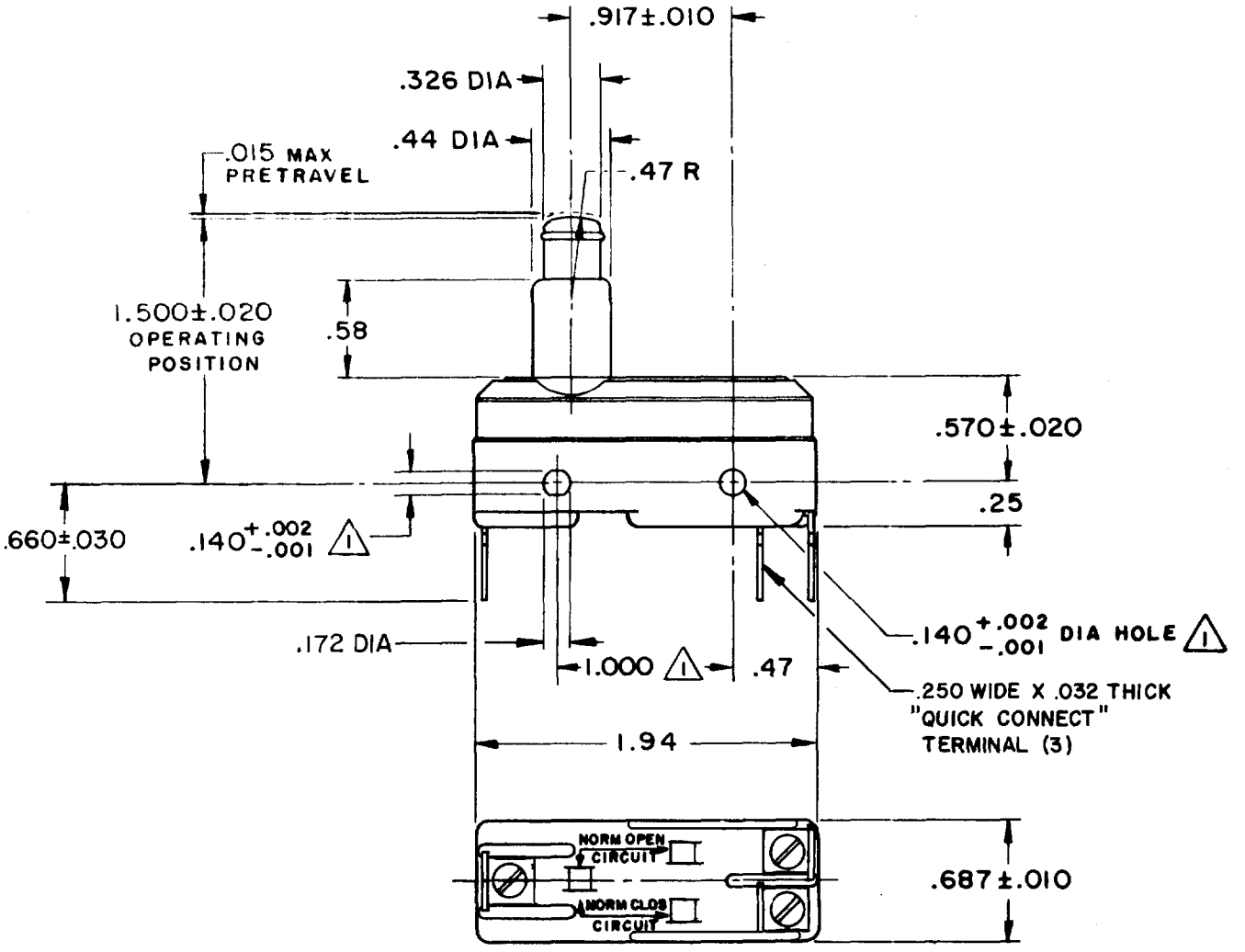

NOTES

1 - MOUNTING HOLES WILL ACCEPT PINS OR SCREWS OF .139 MAX DIA ON 1.000 ±.002 CENTERS

2 - SWITCH WILL WITHSTAND TEMPERATURES OF 250° F

THIS DRAWING COVERS A PROPRIETARY ITEM AND IS THE PROPERTY OF MICRO SWITCH, A DIVISION OF HONEYWELL. THIS DRAWING IS NOT TO BE COPIED OR USED WITHOUT THE APPROVAL OF MICRO SWITCH.

CHARACTERISTICS	ELECTRICAL DATA	SCALE FULL
OPERATING FORCE — — — — — — 9-13 OZ	CONTACT ARRANGEMENT S P D T	DO NOT SCALE PRINT
RELEASE FORCE — — — — — — — 4 OZ MIN	-L96- 15A-125, 250 OR 480 VAC; 1/8HP-125 VAC; 1/4HP-250 VAC; 1/2A-125 VDC; 1/4A-250 VDC	UNLESS OTHERWISE NOTED DIMENSIONS ARE IN INCHES
DIFFERENTIAL TRAVEL — — — .0004-.0020	-L288- -L306- -L310- -L315- 16A 250V ~ T85 5E4	TOLERANCES ARE
OVERTRAVEL — — — — — — — — .219 MIN		ONE PLACE (.0) ±.030; TWO PLACE (.00) ±.015; THREE PLACE (.000) ±.005; ANGLES ±
		WEIGHT .086 LB

M	BZ-2RQ24-D5	PAGE 1 OF 1	REPLACES
DRAWING NUMBER	RELEASE NO.	PR-3776	
6	12SEP07	PSR	CHECK
ISSUE			

REVISIONS

A	CO-77591	DAW 22 JUN 94	15FEB06
B	C093346	DLT 11 SEP 98	
C	CO-94212E	DCS 16 SEP 99	BP
D	0018692	VKR 15FEB06	CHECK
E	0033748	BS 12SEP07	10 JAN '74
			LSD
			CHECK
			2 JAN 74
			GLH

RASTER
DRAWN
FO-52848