MICRO SWITCH
FREEPORT, ILLINOIS, U.S.A.
A DIVISION OF HONEYWELL
FED. MFG. CODE 91929

SWITCH-BASIC

CATALOG LISTING
BZ-2RQ785
ALL3000 & JG08566

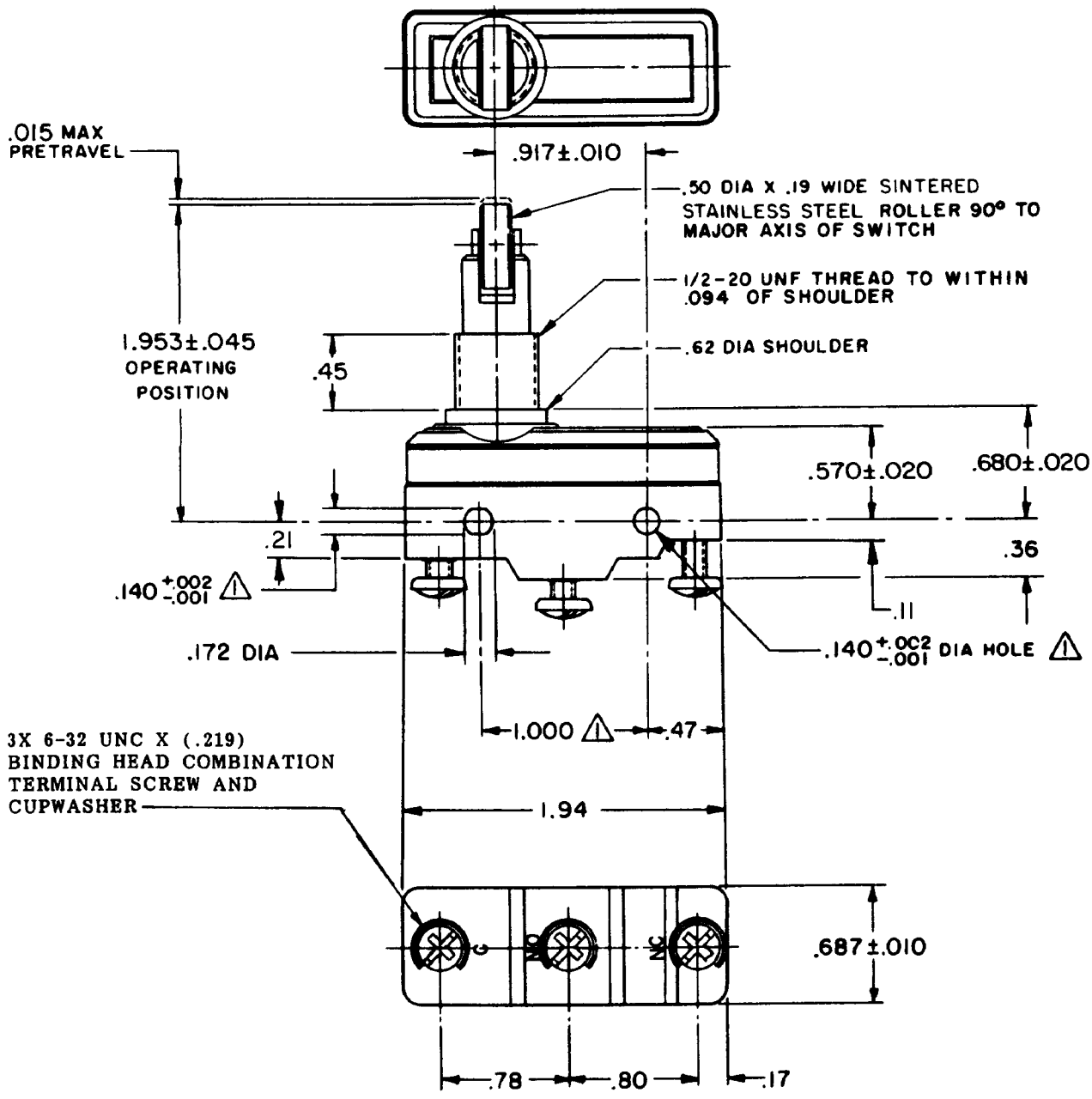

NOTE
1. MOUNTING HOLES WILL ACCEPT PINS OR SCREWS OF .139 MAX DIA ON 1.000±.002 CENTERS
2 - HARDWARE FURNISHED UNASSEMBLED

THIS DRAWING COVERS A PROPRIETARY ITEM AND IS THE PROPERTY OF MICRO SWITCH, A DIVISION OF HONEYWELL. THIS DRAWING IS NOT TO BE COPIED OR USED WITHOUT THE APPROVAL OF MICRO SWITCH.

CHARACTERISTICS

OPERATING FORCE — — — — — — — — 9-13 OZ
RELEASE FORCE — — — — — — — — 4 OZ MIN
DIFFERENTIAL TRAVEL — — — .0004-.0020
OVERTRAVEL — — — — — — — — — — .141 MIN

ELECTRICAL DATA

CONTACT ARRANGEMENT
S P D T

15A-125, 250 OR 480 VAC, 2A-600 VAC
1/8HP-125 VAC, 1/4HP-250 VAC
CODE L74 1/2A-125 VDC; 1/4A-250 VDC
L288
L306
L315 16A 250V ~ T85 5E4

SCALE FULL
DO NOT SCALE PRINT

UNLESS OTHERWISE NOTED
DIMENSIONS ARE IN INCHES
TOLERANCES ARE:

ONE PLACE	(.0)	±.030
TWO PLACE	(.00)	±.015
THREE PLACE	(.000)	±.005
ANGLES		±2°

WEIGHT

BZ-2RQ785 PAGE 1 OF 1
M
DRAWING NUMBER
ISSUE 10
REPLACES
RELEASE NO.
CHECK
18 FEB 06
RJ
CHECK
11 AUG 64
DRAWN
CHECK
30 JUL 64
DRAWN
J A N

REVISIONS

A	CO17410	J A N 30 JUL 64
B	CO34363	B E H 4 NOV 74
C	CO38099	K P K 6 JUN 77
D	CO-73287-J	J A L 22 NOV 93
E	CO-77426-B	DLT 29 JUN 94
F	CO-77592	DAW 15 AUG 94
G	CO-82497-C	DLT 18 MAR 96
H	CO93346	DLT 2 SEP 98
J	0018449	TGP 18 FEB 06

FORMTEK
FO-50378