MICRO SWITCH
a Honeywell Division
FED. MFG. CODE 91929

SWITCH - BASIC

CATALOG LISTING
BZ-2RQW10-A2

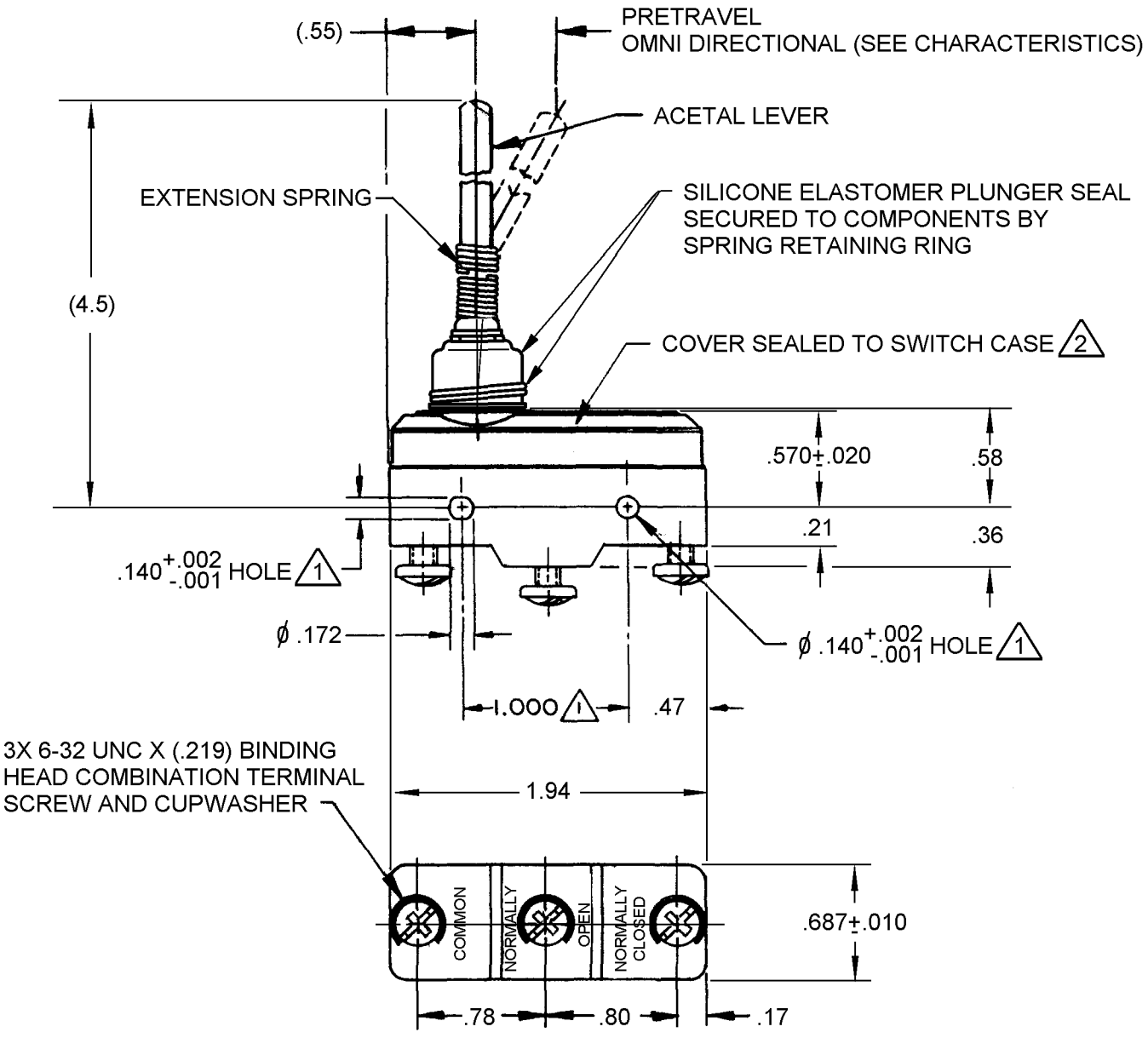

NOTES
1. MOUNTING HOLES WILL ACCEPT PINS OR SCREWS OF ø .139 MAX ON 1.000±.002 CENTERS
2. SEALED CONSTRUCTION PROVIDES SPLASH RESISTANCE

ANSI Y14.5M-1982 APPLIES

THIS DRAWING COVERS A PROPRIETARY ITEM AND IS THE PROPERTY OF MICRO SWITCH, A DIVISION OF HONEYWELL. THIS DRAWING IS NOT TO BE COPIED OR USED WITHOUT THE APPROVAL OF MICRO SWITCH.

THIRD ANGLE PROJECTION

CHARACTERISTICS	ELECTRICAL DATA	SCALE FULL / DO NOT SCALE PRINT
OPERATING FORCE ---------- 13 OZ REF	CONTACT ARRANGEMENT S P D T	UNLESS OTHERWISE SPECIFIED TOLERANCES ARE
PRETRAVEL ---------- .500 REF (OMNI DIRECTIONAL)	L96 15A 125, 250 OR 480 VAC 1/8HP 125 VAC, 1/4HP 250 VAC 1/2A 125 VDC, 1/4A 250 VDC	ONE PLACE (.0) ±.030 TWO PLACE (.00) ±.015 THREE PLACE (.000) ±.005 ANGLES ±
	L288 L299 L306 16A 250V ∿ T85 5E4	WEIGHT

REPLACES X115055-BZ
RELEASE NO. 0000895
CATALOG LISTING BZ-2RQW10-A2
PAGE 1 OF 1
ISSUE A
REVISIONS
CHECK
CHECK
21 JUL 03 SAV
CHECK
21 JUL 03 CSL
DRAWN
RASTER