MICRO SWITCH
FREEPORT ILLINOIS, U.S.A
A DIVISION OF HONEYWELL
FED. MFG. CODE 91929

SWITCH - BASIC

CATALOG LISTING
BZ-2RW82-D5

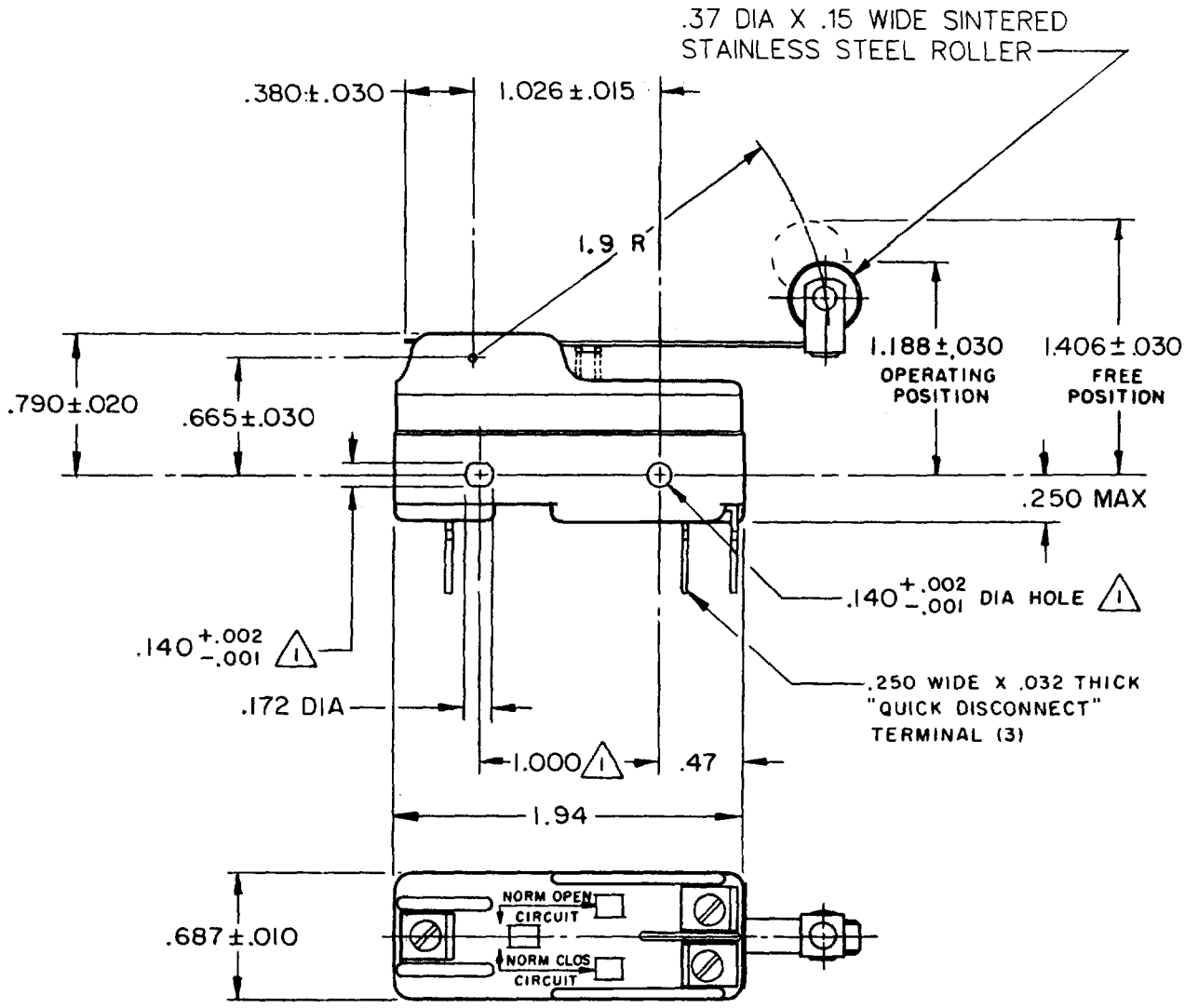

NOTE
1 MOUNTING HOLES WILL ACCEPT PINS OR SCREWS OF .139 MAX DIA ON 1.000±.002 CENTERS

THIS DRAWING COVERS A PROPRIETARY ITEM AND IS THE PROPERTY OF MICRO SWITCH, A DIVISION OF HONEYWELL. THIS DRAWING IS NOT TO BE COPIED OR USED WITHOUT THE APPROVAL OF MICRO SWITCH.

THIRD ANGLE PROJECTION

CHARACTERISTICS

OPERATING FORCE - - - - 3 1/2 OZ MAX

RELEASE FORCE - - - - - 3/4 OZ MIN

DIFFERENTIAL TRAVEL - - - .004-.040

OVERTRAVEL - - - - - - - - .156 MIN

ELECTRICAL DATA

CONTACT ARRANGEMENT
S P D T

CODE L96 15A-125, 250 OR 480 VAC
1/8 HP-125 VAC; 1/4 HP-250 VAC
1/2 A-125 VDC; 1/4 A-250 VDC

L288
L299
L306

16A 250V ~ T85 5E4

SCALE FULL

DO NOT SCALE PRINT

TOLERANCES
APPLY TO DESIGN UNITS. CONVERSIONS ARE ONLY FOR REFERENCE. UNLESS NOTED, TOLERANCES ARE ±

	DIM. mm	TOL. mm/in	DIM. in	TOL. mm/in
NO PLACES	X	1/.04		
ONE PLACE	X.X	0.4/.016	X.X	0.8/.03
TWO PLACES	X.XX	0.15/.006	X.XX	0.38/.015
THREE PLACES			X.XXX	0.13/.005
ANGLES				

SI METRIC ☐ US CUSTOMARY ☒

DESIGN UNITS

WEIGHT .063 LB

BZ-2RW82-D5
PAGE 1 OF 1
DRAWING NUMBER
RELEASE NO. PR-1204
REPLACES
ISSUE 6
CHECK

REVISIONS

A	CO 59037	SMA 1 OCT 85
B	CO-752048	KDR 1 FEB 94
C	CO-77591	DAW 22 JUN 94
D	C093346	DLT 11 SEP 98
E	CO-94212-C	DLT 17 SEP 99

CHECK
6 APRIL 83
CEC
CHECK
83 APR 5
CJH
DRAWN
FORMTEK
FO-52848-A