MICRO SWITCH
a Honeywell Division
FED. MFG. CODE 91929

SWITCH – BASIC

CATALOG LISTING
BZ-2RW8225551-W103

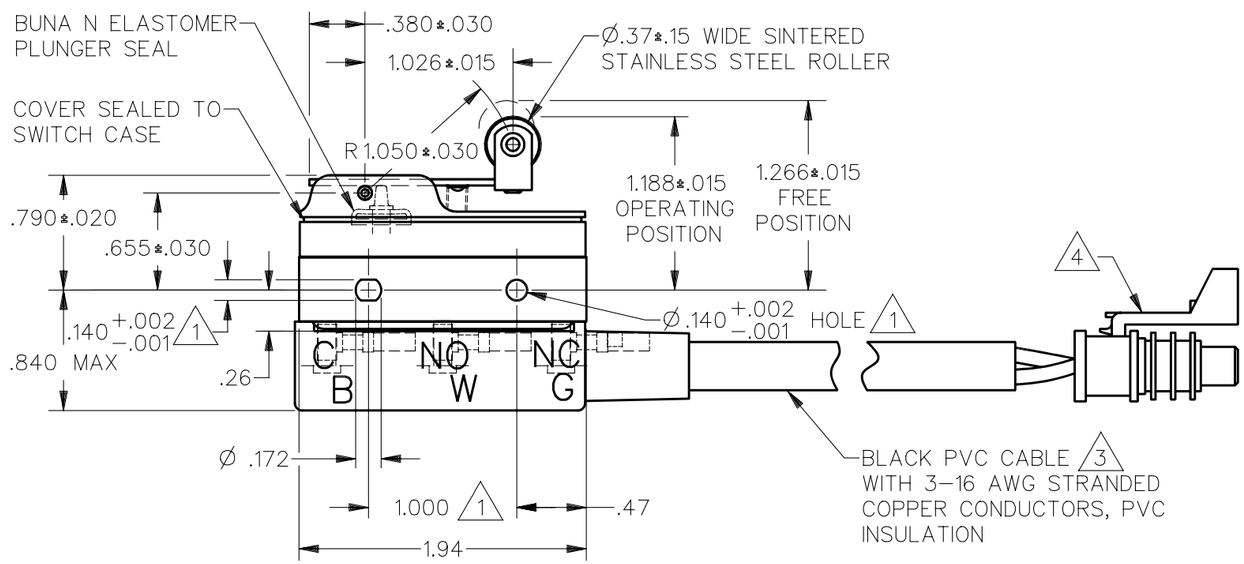

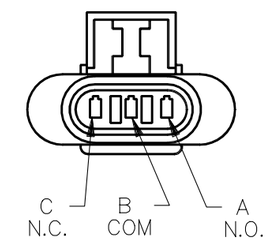

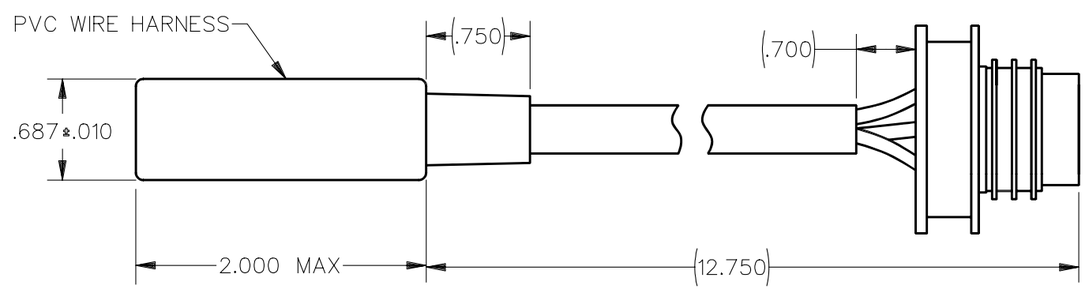

NOTES
(1) MOUNTING HOLES WILL ACCEPT PINS OR SCREWS OF Ø.139 MAX ON 1.000±.002 CENTERS
2 – SEALED CONSTRUCTION PROVIDES SPLASH RESISTANCE
(3) BLACK LEAD IS ATTACHED TO THE COMMON TERMINAL
WHITE LEAD IS ATTACHED TO THE N.O. TERMINAL
GREEN LEAD IS ATTACHED TO THE N.C. TERMINAL
(4) 150 SERIES METRI-PACK CONNECTOR (PACKARD)
3 WAY CONNECTOR 12110293
3X FEMALE TERMINAL 12048074
LOCK 12052845
SEAL 12048086 OR 12052924

THIS DRAWING COVERS A PROPRIETARY ITEM AND IS THE PROPERTY OF MICRO SWITCH, A DIVISION OF HONEYWELL. THIS DRAWING IS NOT TO BE COPIED OR USED WITHOUT THE APPROVAL OF MICRO SWITCH

THIRD ANGLE PROJECTION

SCALE

DO NOT SCALE PRINT

CHARACTERISTICS

OPERATING FORCE — — — — — 6 OZ MAX
RELEASE FORCE — — — — 1 1/2 OZ MIN
DIFFERENTIAL TRAVEL — — — .003–.020
OVERTRAVEL — — — — — — — .094 MIN

ELECTRICAL DATA

CONTACT ARRANGEMENT
S P D T

UNLESS OTHERWISE SPECIFIED TOLERANCES ARE

ONE PLACE	(.0)	±.030
TWO PLACE	(.00)	±.015
THREE PLACE	(.000)	±.005
ANGLES		±

WEIGHT

ANSI Y14.5M–1982 APPLIES

CATALOG LISTING BZ-2RW8225551-W103
ISSUE 5
REPLACES X95565-BZ
RELEASE NO. PR-20141-T
CHECK
REVISIONS
A CO-75204B TSM 1 FEB 94
B CO-75367B LJF 9 MAR 94
C CO-80384 S A V 2 MAY 95
D CO-82977 D L T 14 MAY 96
CHECK
9 SEP 92 W J C
CHECK
28 AUG 92 J W B
DRAWN
DDM/CAD