MICRO SWITCH
FREEPORT ILLINOIS, U.S.A
A DIVISION OF HONEYWELL
FED. MFG. CODE 91929

SWITCH-BASIC

CATALOG LISTING
BZ-2RW825551-A2
APZ4250

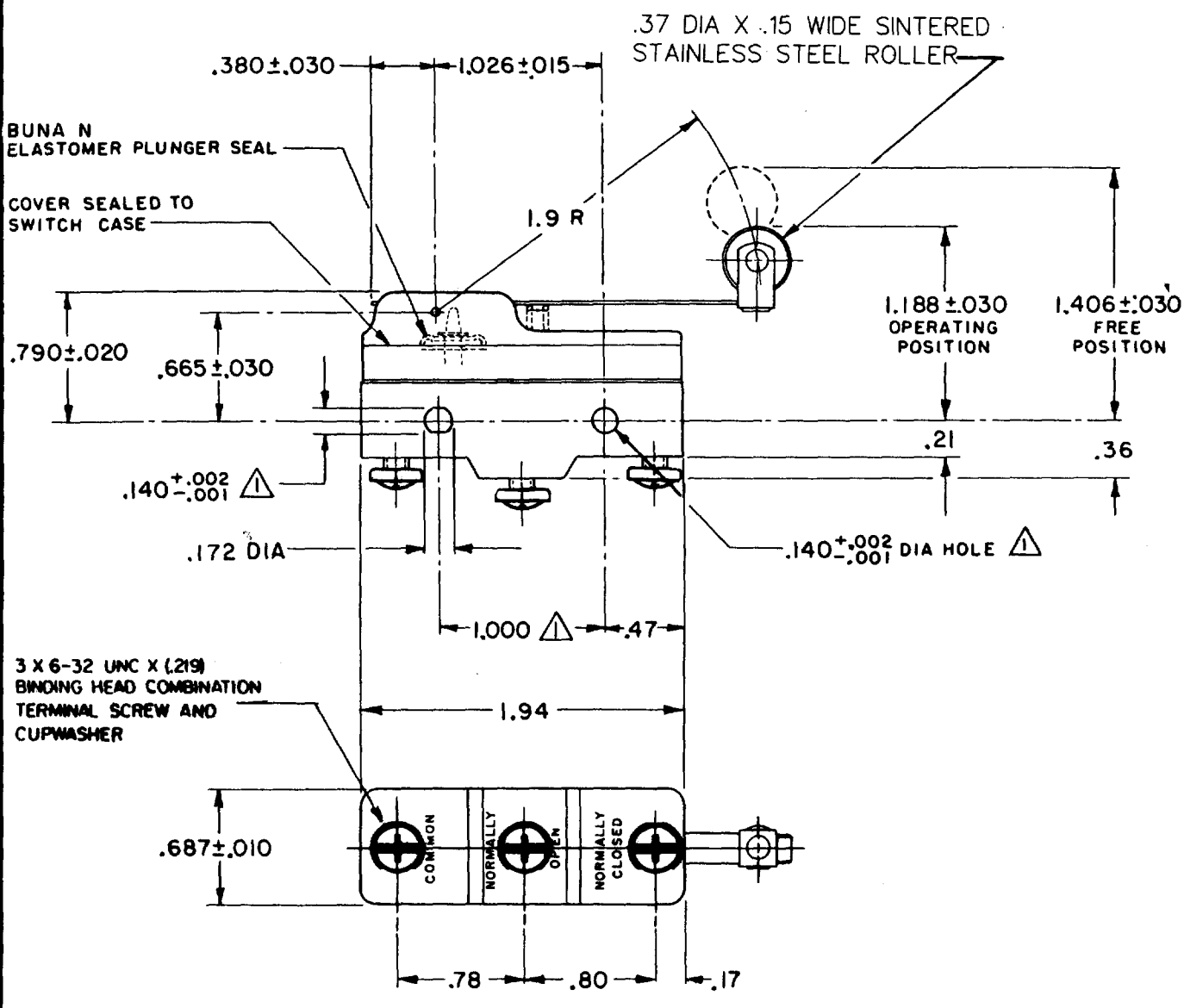

NOTES
△1 MOUNTING HOLES WILL ACCEPT PINS OR SCREWS OF .139 MAX DIA ON 1.000±.002 CENTERS
2 - SEALED CONSTRUCTION PROVIDES SPLASH RESISTANCE

THIS DRAWING COVERS A PROPRIETARY ITEM AND IS THE PROPERTY OF MICRO SWITCH, A DIVISION OF HONEYWELL. THIS DRAWING IS NOT TO BE COPIED OR USED WITHOUT THE APPROVAL OF MICRO SWITCH.

CHARACTERISTICS

OPERATING FORCE ---- 3 1/2 OZ MAX
RELEASE FORCE ------- 3/4 OZ MIN
DIFFERENTIAL TRAVEL ---- .004-.040
OVERTRAVEL ---------- .156 MIN

ELECTRICAL DATA

CONTACT ARRANGEMENT
S P D T

-L96- 15 A-125, 250, OR 480 VAC
1/2 A-125 VDC; 1/4 A-250 VDC
1/8 HP-125 VAC, 1/4 HP-250 VAC

-L288-
-L315-
-L306-

16A 250V ~ T85 5E4

SCALE FULL
DO NOT SCALE PRINT

UNLESS OTHERWISE NOTED
DIMENSIONS ARE IN INCHES
TOLERANCES ARE:

ONE PLACE	(.0)	±.030
TWO PLACE	(.00)	±.015
THREE PLACE	(.000)	±.005
ANGLES		±

WEIGHT .076 LB

MBZ-2RW825551-A2
PAGE 1 OF 1

DRAWING NUMBER	REPLACES	RELEASE NO.	CHECK	REVISIONS
8		PR-1036	08DEC05	RJ
X				
ISSUE				

REVISIONS			
A	C067209	J A P 3 MAY 90	4 Feb 70
B	CO-73287-C	K D R 21 JUN 93	CUT
C	CO-76588	K D R 3 SEP 93	CHECK
D	CO-75204B	K D R 1 FEB 94	4 Feb 70
E	CO-77589	MAM 29 MAR 94	USD
F	C093346	D L T 17 SEP 98	CHECK
G	0017579	KRB 08DEC05	17 DEC 69

DRAWN G C H

FORMTEK
FO-50378-1A