MICRO SWITCH
FREEPORT ILLINOIS, U.S.A
A DIVISION OF HONEYWELL
FED. MFG. CODE 91929

SWITCH - BASIC

CATALOG LISTING
BZ-2RW855-P4-S

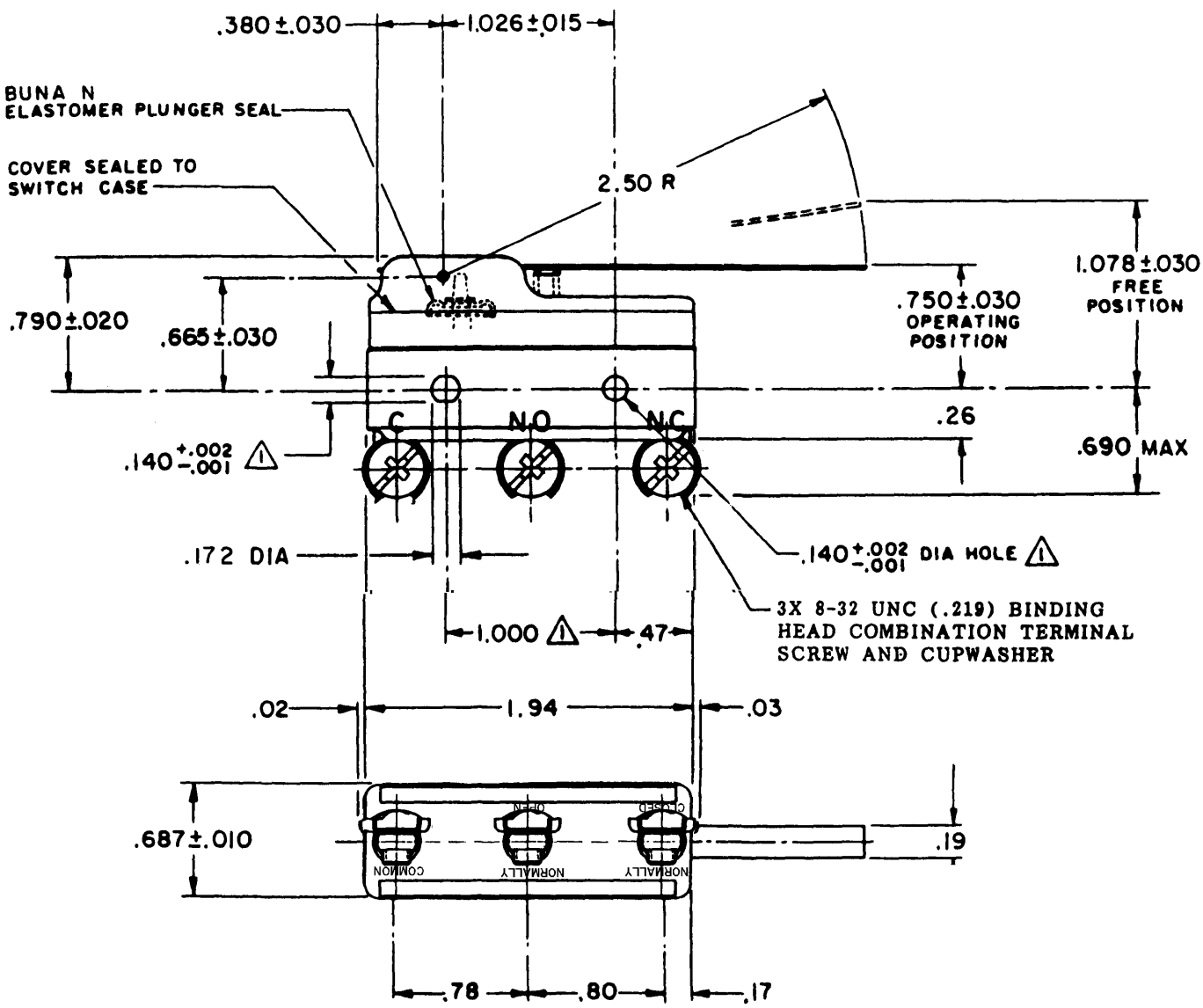

NOTES
⚠1 MOUNTING HOLES WILL ACCEPT PINS OR SCREWS OF .139 MAX DIA ON 1.000±.002 CENTERS
2 - SEALED CONSTRUCTION PROVIDES SPLASH RESISTANCE

THIS DRAWING COVERS A PROPRIETARY ITEM AND IS THE PROPERTY OF MICRO SWITCH, A DIVISION OF HONEYWELL. THIS DRAWING IS NOT TO BE COPIED OR USED WITHOUT THE APPROVAL OF MICRO SWITCH.

THIRD ANGLE PROJECTION

CHARACTERISTICS

OPERATING FORCE --- 2 1/2 OZ MAX
RELEASE FORCE - - - - - 1/2 OZ MIN
DIFFERENTIAL TRAVEL - - -.007-.050
OVERTRAVEL - - - - - - - - - -.219 MIN

ELECTRICAL DATA

CONTACT ARRANGEMENT
S P D T

L96
15A 125, 250 OR 480 VAC
1/8 HP 125 VAC, 1/4 HP 250 VAC
1/2A 125 VDC, 1/4A 250 VDC

L288
L299
L306
16A 250V ~ T85 5E4

SCALE FULL
DO NOT SCALE PRINT

TOLERANCES
APPLY TO DESIGN UNITS. CONVERSIONS ARE ONLY FOR REFERENCE. UNLESS NOTED, TOLERANCES ARE ±

	DIM. mm	TOL. mm/in	DIM. in	TOL. mm/in
NO PLACES	X	1/04		
ONE PLACE	X.X	0.4/.016	X.X	0.8/.03
TWO PLACES	X.XX	0.15/.006	X.XX	0.38/.015
THREE PLACES			X.XXX	0.13/.005
ANGLES				

DESIGN UNITS SI METRIC ☐ US CUSTOMARY ☒

WEIGHT .088 LB

M BZ-2RW855-P4-S PAGE 1 OF 1
RELEASE NO. PR-6918
REPLACES
DRAWING NUMBER
ISSUE 6
CHECK

REVISIONS

A	C067209	JAP 3 MAY 90
B	CO-73287-G	JAL 20 OCT 93
C	CO-75367B	SAV 3 MAR 94
D	CO-77863	GJW 8 MAY 96
E	C093346	DLT 14 SEP 98

CHECK GCH 28 DEC 77
CHECK
CHECK
DRAWN GAS 17 DEC 77

FORMTEK
FO-52848-A