MICRO SWITCH
FREEPORT ILLINOIS, U.S.A
A DIVISION OF HONEYWELL
FED. MFG. CODE 91929

SWITCH—BASIC

CATALOG LISTING
BZ-3RDS15T-S

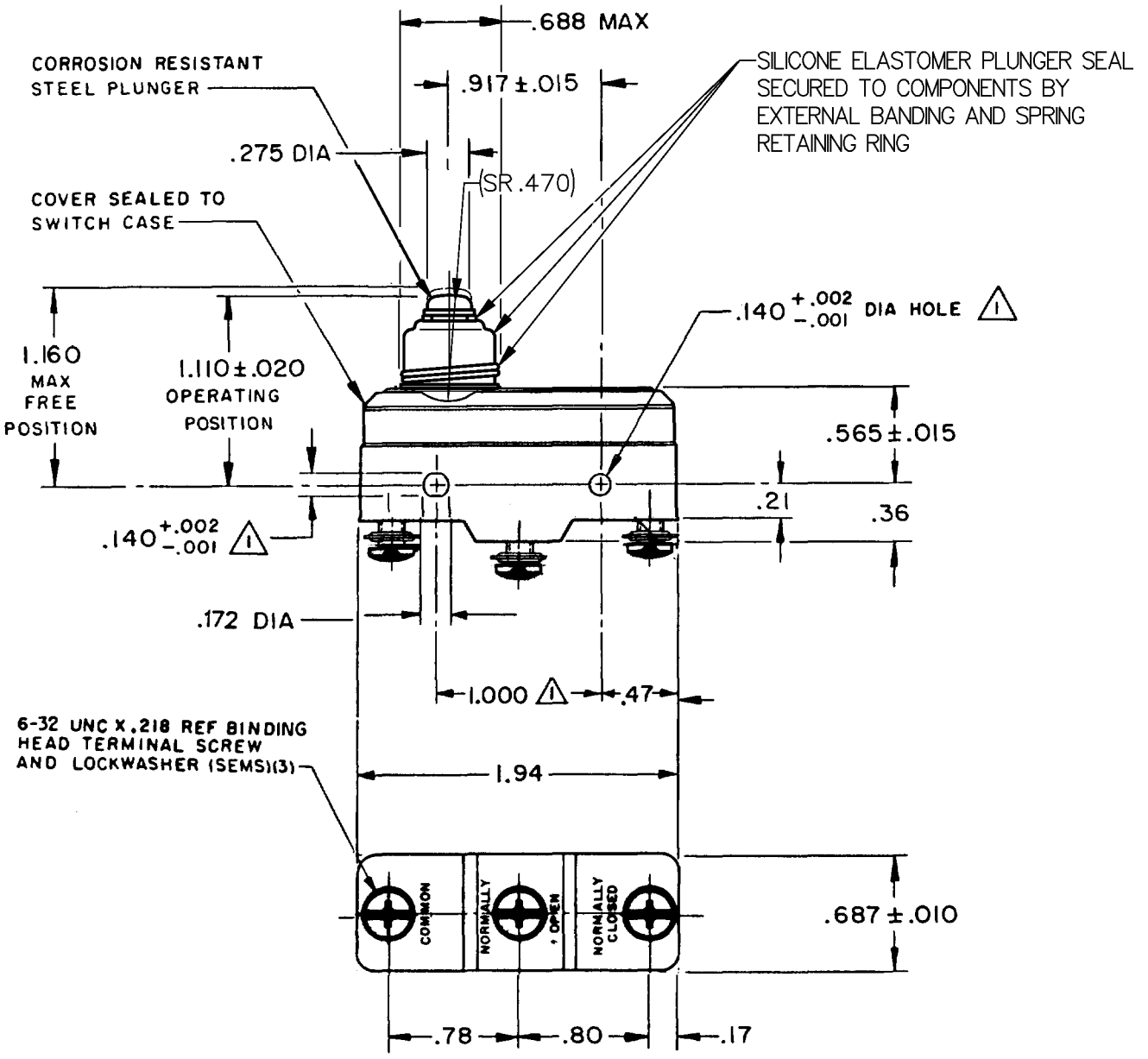

NOTE-
1 MOUNTING HOLES WILL ACCEPT PINS OR SCREWS OF .139 MAX DIA ON 1.000 ± .002 CENTERS
2- SEALED CONSTRUCTION PROVIDES SPLASH RESISTANCE

THIS DRAWING COVERS A PROPRIETARY ITEM AND IS THE PROPERTY OF MICRO SWITCH, A DIVISION OF HONEYWELL. THIS DRAWING IS NOT TO BE COPIED OR USED WITHOUT THE APPROVAL OF MICRO SWITCH.

THIRD ANGLE PROJECTION

CHARACTERISTICS

OPERATING FORCE — — 12-20 OZ

RELEASE FORCE — — — 4 OZ MIN

DIFFERENTIAL TRAVEL — .0008—.0035

OVERTRAVEL — — — — .060 MIN

ELECTRICAL DATA

CONTACT ARRANGEMENT
S P D T

L9

10A 125, 250 OR 480 VAC
1/2 A 125 VDC, 1/4 A 250 VDC

-L 288-

SCALE FULL

DO NOT SCALE PRINT

TOLERANCES
APPLY TO DESIGN UNITS. CONVERSIONS ARE ONLY FOR REFERENCE. UNLESS NOTED, TOLERANCES ARE ±

	DIM. mm	TOL. mm/in	DIM in	TOL. mm/in
NO PLACES	X	1/.04		
ONE PLACE	X.X	0.4/.016	X X	0.8/.03
TWO PLACES	X.XX	0.15/.006	X XX	0.38/.015
THREE PLACES			X XXX	0.13/.005
ANGLES				

SI METRIC — DESIGN UNITS — US CUSTOMARY

WEIGHT .076 LB

BZ-3RDS15T-S
PAGE 1 OF 1
M
DRAWING NUMBER
RELEASE NO. PR-6725
REPLACES
8
ISSUE
CHECK

REVISIONS

A	CO 39621	T M M 16 DEC 77
B	C067209	J A P 3 MAY 90
C	CO-89351-D	JWB 18 JUL 91
D	C071458	J A L 19 NOV 91
E	CO-77588	K D R 29 MAR 94
F	C083108	G J W 12 JUN 96
G	C093346	D L T 12 AUG 98

CHECK 18 OCT 77
CHECK SLH
CHECK 11 OCT 77
DRAWN T M M
FORMTEK