MICRO SWITCH
a Honeywell Division
FED. MFG. CODE 91929

SWITCH - BASIC

CATALOG LISTING
BZ-3YST

(M) BZ-3YST ISSUE 6
REPLACES
RELEASE NO.
CATALOG LISTING BZ-3YST
PAGE 1 OF 1
ISSUE 13 M
CHECK
CHECK
22 NOV 02
SAV
CHECK
22 NOV 02
CSL
DRAWN
RASTER

REVISIONS

A	206922
CSL 22 NOV 02	

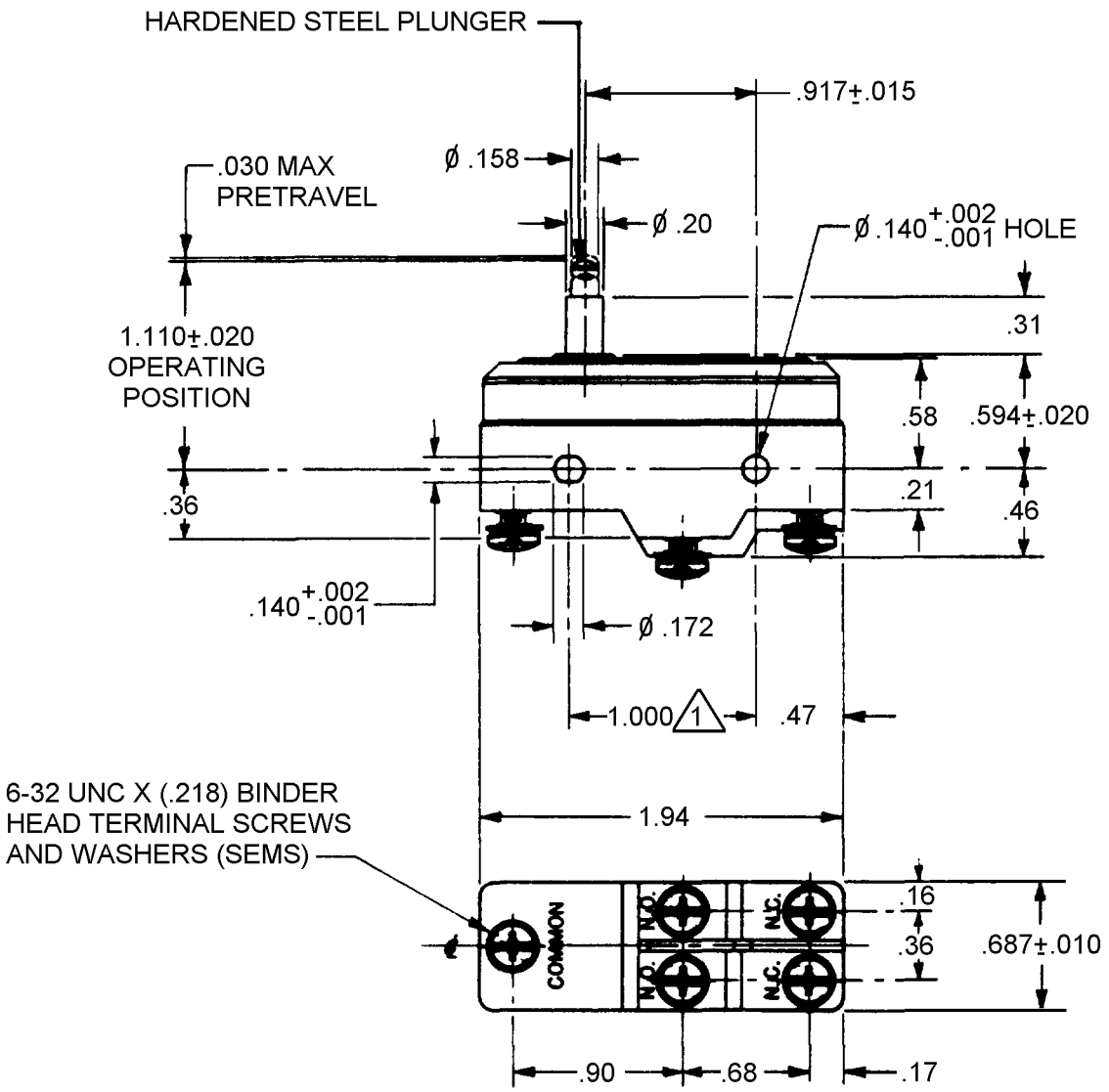

NOTES
1. MOUNTING HOLES WILL ACCEPT PINS OR SCREWS OF Ø .139 MAX ON 1.000±.002 CENTERS
2 - SWITCH WILL PERFORM SATISFACTORILY IN TEMPERATURE TO -65°

THIS DRAWING COVERS A PROPRIETARY ITEM AND IS THE PROPERTY OF MICRO SWITCH, A DIVISION OF HONEYWELL. THIS DRAWING IS NOT TO BE COPIED OR USED WITHOUT THE APPROVAL OF MICRO SWITCH.

THIRD ANGLE PROJECTION

CHARACTERISTICS	
OPERATING FORCE	16-26 OZ
RELEASE FORCE	4 OZ MIN
DIFFERENTIAL TRAVEL	.001-.004
OVERTRAVEL	.062 MIN

ELECTRICAL DATA

CONTACT ARRANGEMENT
S P D T SPLIT CONTACT

L4
5A 250 VAC

SCALE FULL — DO NOT SCALE PRINT

UNLESS OTHERWISE SPECIFIED TOLERANCES ARE

ONE PLACE	(.0)	±.030
TWO PLACE	(.00)	±.015
THREE PLACE	(.000)	±.005
ANGLES		±

WEIGHT .065 LB.