MICRO SWITCH
FREEPORT ILLINOIS, U.S.A
A DIVISION OF HONEYWELL
FED. MFG. CODE 91929

SWITCH-BASIC

CATALOG LISTING
BZ-7RW84-A2
AQJ8400

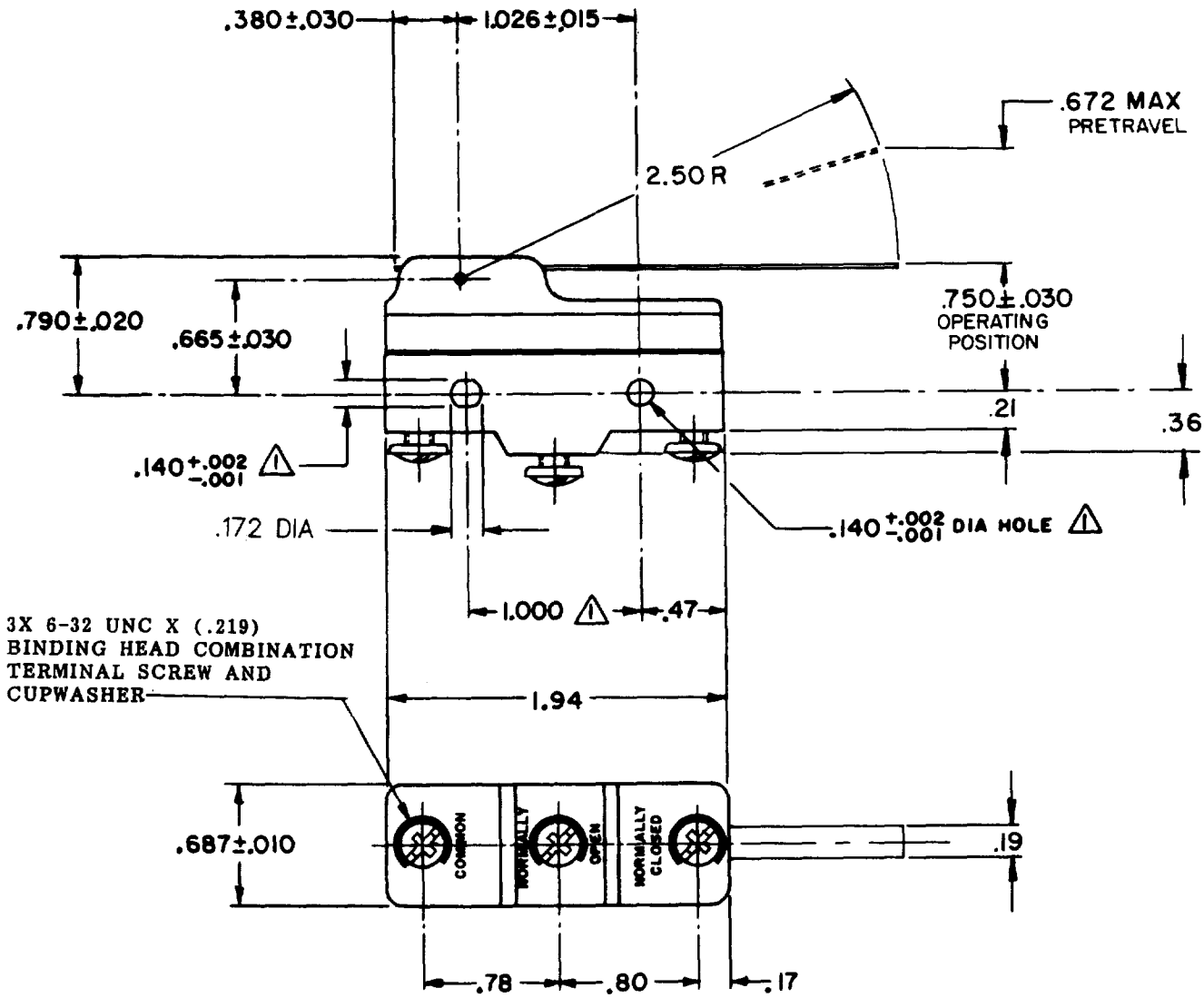

NOTE
⚠ MOUNTING HOLES WILL ACCEPT PINS OR SCREWS .139 MAX DIA ON 1.000 ±.002 CENTERS

THIS DRAWING COVERS A PROPRIETARY ITEM AND IS THE PROPERTY OF MICRO SWITCH, A DIVISION OF HONEYWELL. THIS DRAWING IS NOT TO BE COPIED OR USED WITHOUT THE APPROVAL OF MICRO SWITCH.

CHARACTERISTICS

OPERATING FORCE ------ 2 OZ MAX

RELEASE FORCE ---- 1/8 OZ MIN

DIFFERENTIAL TRAVEL ---.050-.125

OVERTRAVEL ---------.219 MIN

ELECTRICAL DATA

CONTACT ARRANGEMENT
S P D T

-L96- 15 A-125, 250, OR 480 VAC
1/2 A-125 VDC; 1/4 A-250 VDC
1/8 HP-125 VAC; 1/4 HP-250 VAC

-L288-
-L315-
-L306-
16A 250V ∼ T85 5E4

SCALE FULL
DO NOT SCALE PRINT

UNLESS OTHERWISE NOTED
DIMENSIONS ARE IN INCHES
TOLERANCES ARE:

ONE PLACE	(.0)	±.030
TWO PLACE	(.00)	±.015
THREE PLACE	(.000)	±.005
ANGLES		±1°

WEIGHT .073 LB

M BZ-7RW84-A2
PAGE 1 OF 1
RELEASE NO. PR-3697
REPLACES
DRAWING NUMBER
7
ISSUE

REVISIONS

A	MADE ETS ORD 22 JAN 68		06 JAN 06
B	PR-3697 R E R 17 NOV 73		
C	CO-73287-J J A L 22 NOV 93	RJ	
D	CO 77589 TSM 29 MAR 94		
E	C093346 D L T 20 SEP 98		
F	0017582 TSG 06 JAN 06		24 JAN 06

CHECK
CHECK
CHECK

FORMTEK
FO-50376-1A
DRAWN
ORD 22 JAN 68