MICRO SWITCH
FREEPORT ILLINOIS, U.S.A
A DIVISION OF HONEYWELL
FED. MFG. CODE 91929

SWITCH - BASIC

CATALOG LISTING
BZ-R55-A2-S

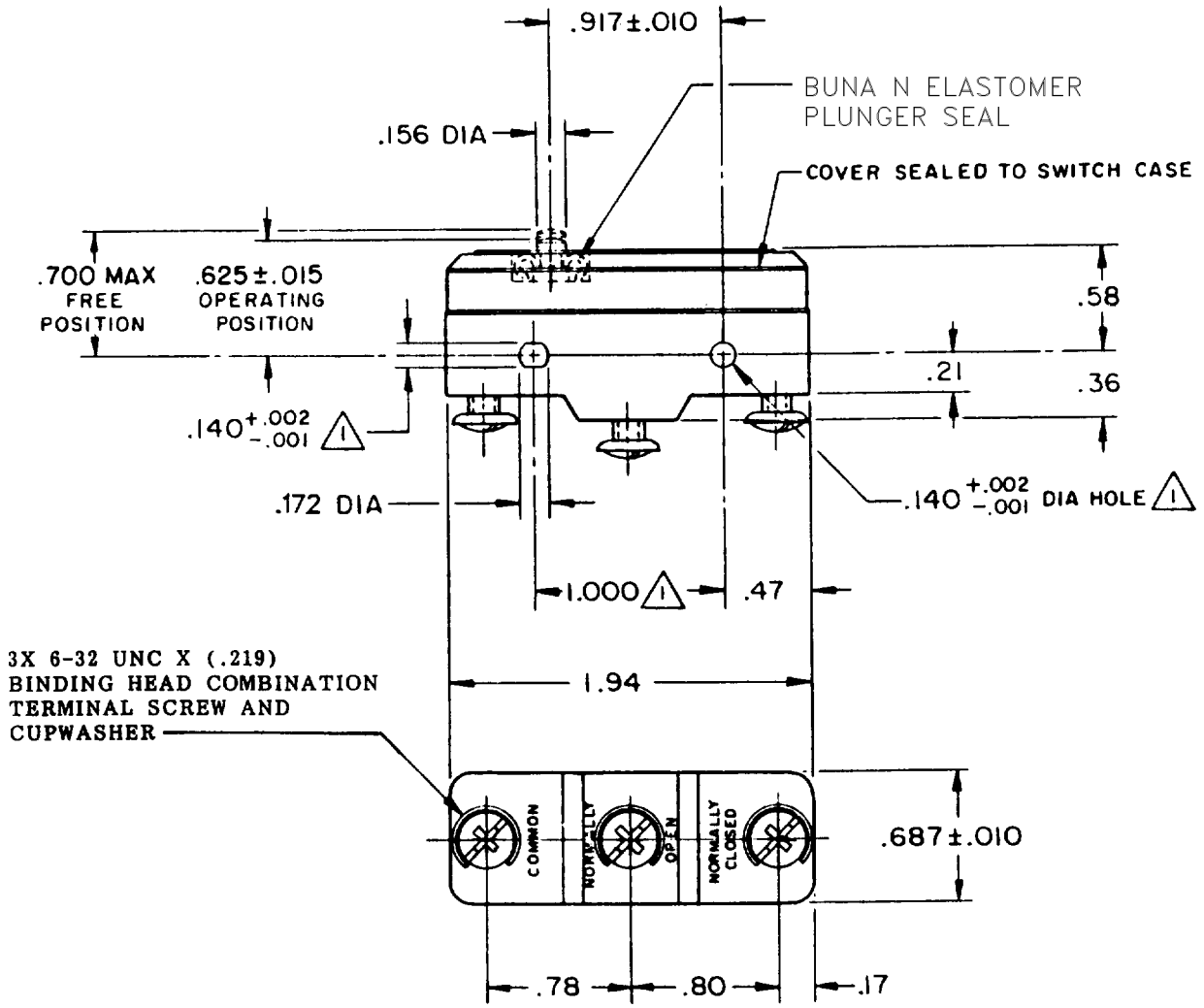

NOTE-
(1) MOUNTING HOLES WILL ACCEPT PINS OR SCREWS OF .139 MAX DIA ON 1.000± .002 CENTERS
2 - SEALED CONSTRUCTION PROVIDES SPLASH RESISTANCE

THIS DRAWING COVERS A PROPRIETARY ITEM AND IS THE PROPERTY OF MICRO SWITCH, A DIVISION OF HONEYWELL. THIS DRAWING IS NOT TO BE COPIED OR USED WITHOUT THE APPROVAL OF MICRO SWITCH.

THIRD ANGLE PROJECTION

CHARACTERISTICS

OPERATING FORCE ------ 6 1/2-10 OZ

RELEASE FORCE -------- 4 OZ MIN

DIFFERENTIAL TRAVEL--.0002-.0005

OVERTRAVEL --------.005 MIN

ELECTRICAL DATA

CONTACT ARRANGEMENT
S P D T

UL LISTED-FILE E12252
CODE L103
15A-125, 250 OR 480 VAC
1/8 HP-125 VAC; 1/4 HP-250 VAC

SCALE FULL

DO NOT SCALE PRINT

TOLERANCES
APPLY TO DESIGN UNITS. CONVERSIONS ARE ONLY FOR REFERENCE. UNLESS NOTED, TOLERANCES ARE ±

	DIM. mm	TOL. mm/in	DIM. in	TOL. mm/in
NO PLACES	X	1/.04		
ONE PLACE	X.X	0.4/.016	X.X	0.8/.03
TWO PLACES	X.XX	0.15/.006	X.XX	0.38/.015
THREE PLACES			X.XXX	0.13/.005
ANGLES				

DESIGN UNITS SI METRIC ☐ US CUSTOMARY ☒

WEIGHT .066 LB

BZ-R55-A2-S
M
DRAWING NUMBER
ISSUE 4
RELEASE NO. PR-6918
REPLACES
CHECK

REVISIONS
A CO-78656-B JALA 25 JUL 95

CHECK 3 JAN 78 GCH
CHECK
CHECK 77 DEC 15 JAP
DRAWN

FORMTEK