MICRO SWITCH
FREEPORT ILLINOIS, U.S.A
A DIVISION OF HONEYWELL
FED. MFG. CODE 91959

SWITCH – BASIC

CATALOG LISTING
BZ-RD24-A4

AHB3525

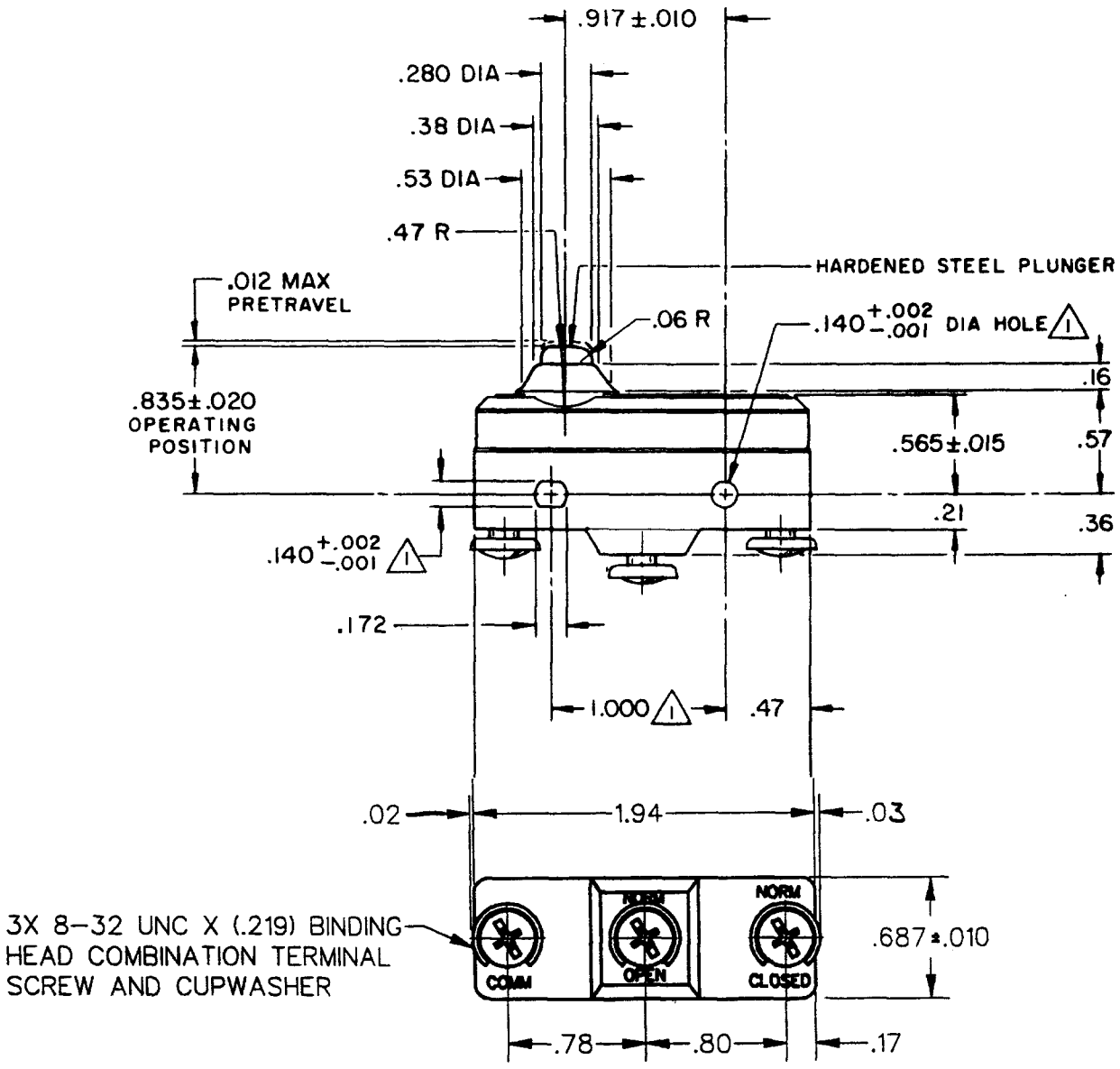

NOTE -
1. MOUNTING HOLES WILL ACCEPT PINS OR SCREWS OF .139 MAX DIA ON 1.000±.002 CENTERS
2 - SWITCH WILL WITHSTAND TEMPERATURE OF 250°F

THIS DRAWING COVERS A PROPRIETARY ITEM AND IS THE PROPERTY OF MICRO SWITCH, A DIVISION OF HONEYWELL. THIS DRAWING IS NOT TO BE COPIED OR USED WITHOUT THE APPROVAL OF MICRO SWITCH.

CHARACTERISTICS

OPERATING FORCE – – – – – 6-9 1/2 OZ

RELEASE FORCE – – – – – – – – 4 OZ MIN

DIFFERENTIAL TRAVEL – – – .0002-.0005

OVERTRAVEL – – – – – – – – – .060 MIN

ELECTRICAL DATA

CONTACT ARRANGEMENT
S P D T

L103 — 15A 125, 250 OR 480 VAC
1/8HP 125 VAC, 1/4HP 250 VAC (T)

L288
L306
L310
L315 — 16A 250V ∿ T85 5E4

SCALE FULL

DO NOT SCALE PRINT

UNLESS OTHERWISE NOTED
DIMENSIONS ARE IN INCHES
TOLERANCES ARE

ONE PLACE	(.0)	±.030
TWO PLACE	(.00)	±.015
THREE PLACE	(.000)	±.005
ANGLES		±

WEIGHT .064 LB

CATALOG LISTING
BZ-RD24-A4
PAGE 1 OF 1
RELEASE NO. PR-3272
REPLACES
M
ISSUE 6
12SEP07
PSR
CHECK
18 FEB 06
RJ
CHECK
13 APR 73
BAO
CHECK
73
12 APR 73
DRAWN
RASTER
FO-52848

REVISIONS

A	CO-73267-G JAL 20 OCT 93	
B	CO-79599E JJA 24 FEB 95	
C	203155 CSL 24 MAY 01	
D	0018688 TGP 18 FEB 06	
E	0033748 BS 12SEP07	