MICRO SWITCH
FREEPORT ILLINOIS, U.S.A
A DIVISION OF HONEYWELL INC.
FED. MFG. CODE 91929

SWITCH–BASIC

CATALOG LISTING
BZ-RMX4

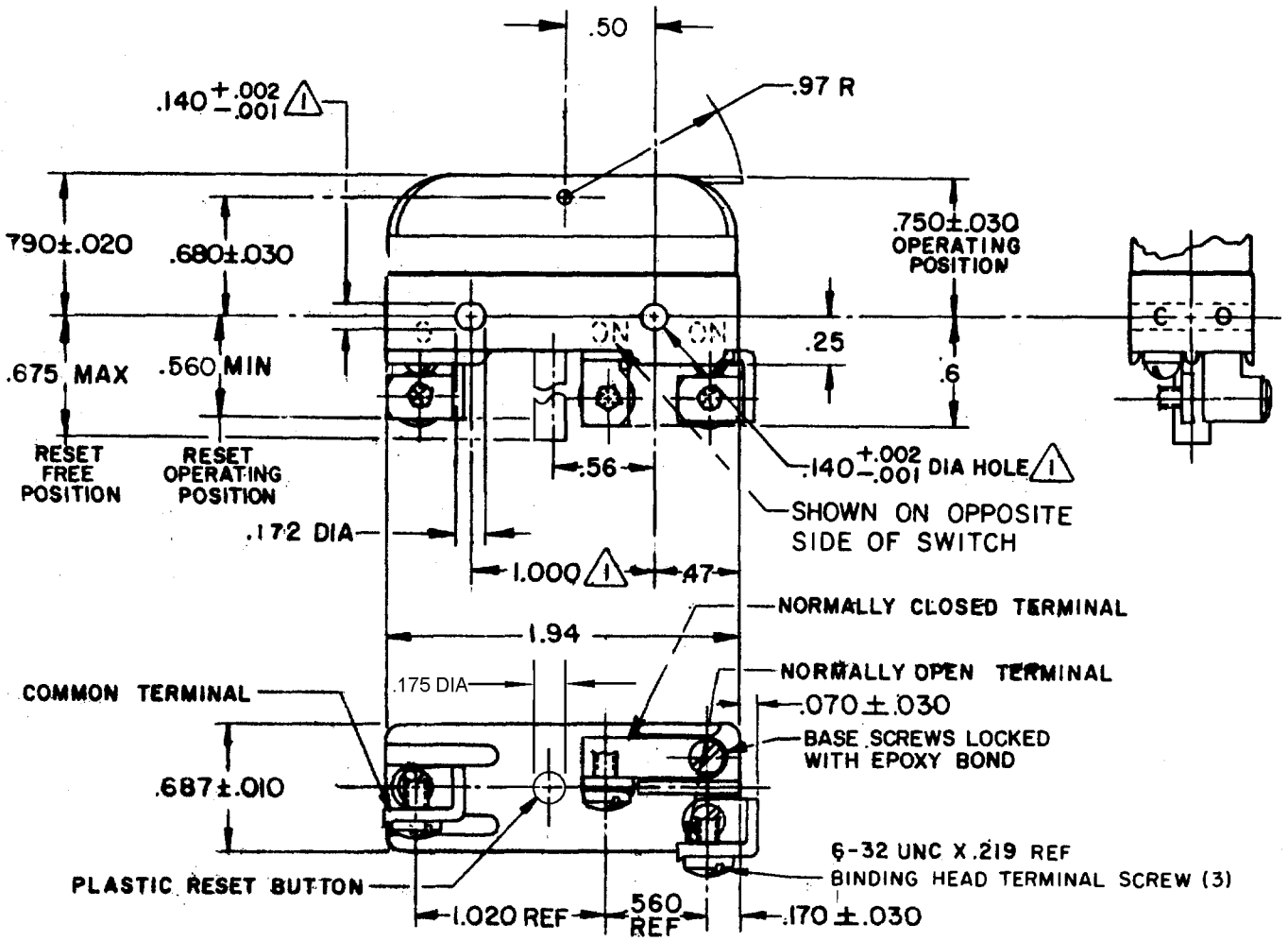

NOTE
(1) MOUNTING HOLES WILL ACCEPT PINS OR SCREWS OF .139 MAX DIA ON 1.000±.002 CENTERS

THIS DRAWING COVERS A PROPRIETARY ITEM AND IS THE PROPERTY OF MICRO SWITCH. A DIVISION OF HONEYWELL. THIS DRAWING IS NOT TO BE COPIED OR USED WITHOUT THE APPROVAL OF MICRO SWITCH.

THIRD ANGLE PROJECTION

CHARACTERISTICS

OVERTRAVEL — — — — — .062 MIN

RESET CHARACTERISTICS
(WITH LEVER HELD DOWNWARD)

OPERATING FORCE — — — 2-10 OZ
OVERTRAVEL — — — — — .015 MIN

ELECTRICAL DATA

CONTACT ARRANGEMENT
S P D T (MAINTAINED CONTACT)

L67

15A 125, 250 OR 480 VAC
1/4 HP 125 VAC, 1/2 HP 250 VAC
1/2A 125 VDC, 1/4A 250 VDC

SCALE FULL — DO NOT SCALE PRINT

UNLESS OTHERWISE SPECIFIED TOLERANCES ARE

ONE PLACE	(.0)	±.030
TWO PLACE	(.00)	±.015
THREE PLACE	(.000)	±.005
ANGLES		±

RAW MATERIAL – COMMERCIAL STANDARD

DIMENSIONS ARE IN INCHES AND ARE TO BE MET BEFORE PROTECTIVE COATINGS ARE APPLIED

MICRO SWITCH STANDARDS APPLY

WEIGHT

REPLACES X45688-BZ
RELEASE NO. PR-3361
BZ-RMX4
M
DRAWING NUMBER
ISSUE X 10

REVISIONS

A	OBS DWG C045523	DLP 30 JAN 79
B	RE-IN PRI3424	KJS 22 OCT 84
C	C059328	CJH 26 APR 86
D	C063950	JAS 1 NOV 88
E	C077590	DLT 9 JUN 94
F	207078	JAH 17 DEC 02

CHECK 23 OCT 84 CHECK 23 DEC CHECK 22 OCT 84 DRAWN KJS

FO-52848-B