view schown without plastic pin and grounding

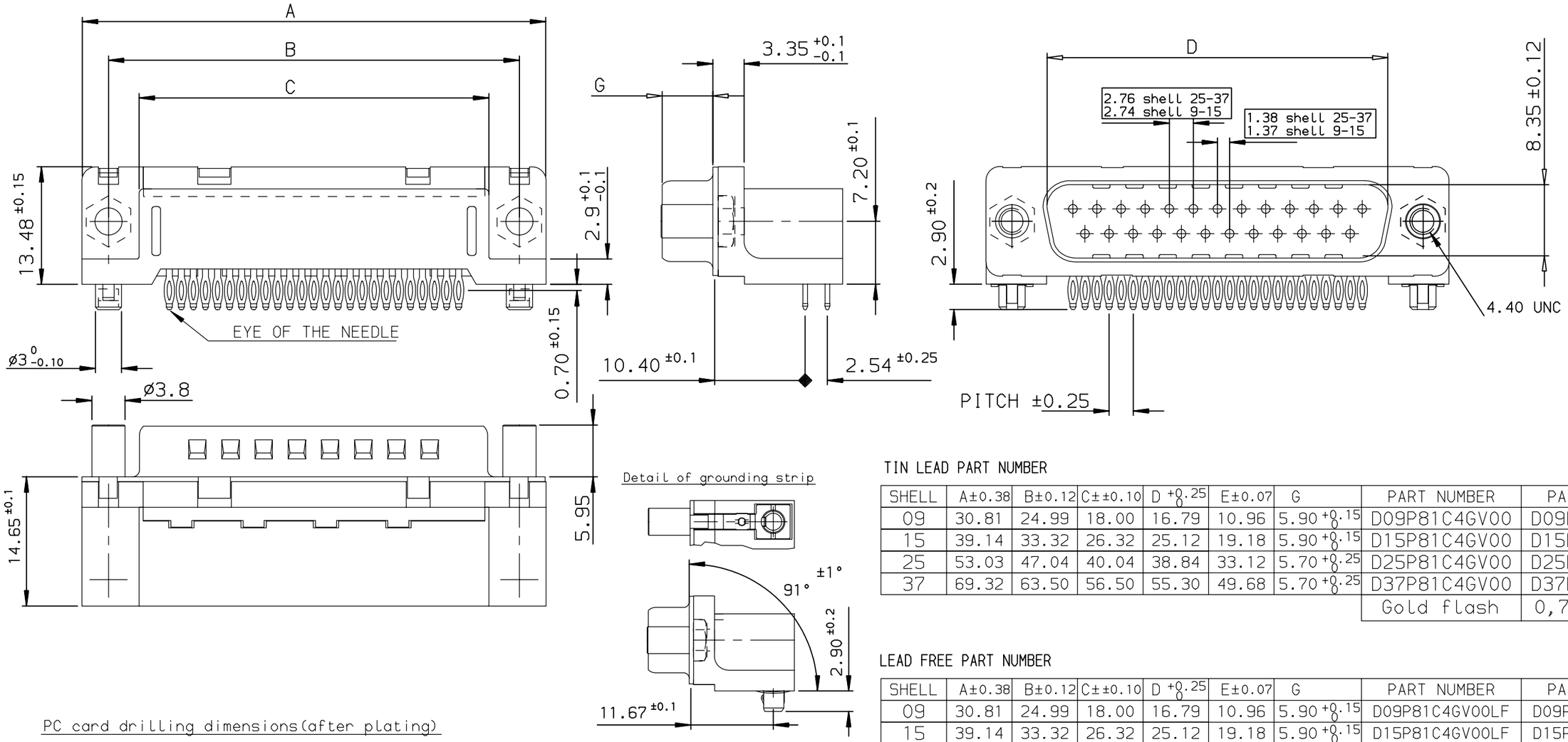

Detail of grounding strip

TIN LEAD PART NUMBER

SHELL	A±0.38	B±0.12	C±±0.10	D $^{+0.25}_{0}$	E±0.07	G	PART NUMBER	PART NUMBER
09	30.81	24.99	18.00	16.79	10.96	5.90 $^{+0.15}_{0}$	D09P81C4GV00	D09P81C6GV00
15	39.14	33.32	26.32	25.12	19.18	5.90 $^{+0.15}_{0}$	D15P81C4GV00	D15P81C6GV00
25	53.03	47.04	40.04	38.84	33.12	5.70 $^{+0.25}_{0}$	D25P81C4GV00	D25P81C6GV00
37	69.32	63.50	56.50	55.30	49.68	5.70 $^{+0.25}_{0}$	D37P81C4GV00	D37P81C6GV00
							Gold flash	0,76 µ gold

LEAD FREE PART NUMBER

SHELL	A±0.38	B±0.12	C±±0.10	D $^{+0.25}_{0}$	E±0.07	G	PART NUMBER	PART NUMBER
09	30.81	24.99	18.00	16.79	10.96	5.90 $^{+0.15}_{0}$	D09P81C4GV00LF	D09P81C6GV00LF
15	39.14	33.32	26.32	25.12	19.18	5.90 $^{+0.15}_{0}$	D15P81C4GV00LF	D15P81C6GV00LF
25	53.03	47.04	40.04	38.84	33.12	5.70 $^{+0.25}_{0}$	D25P81C4GV00LF	D25P81C6GV00LF
37	69.32	63.50	56.50	55.30	49.68	5.70 $^{+0.25}_{0}$	D37P81C4GV00LF	D37P81C6GV00LF
							Gold flash	0,76 µ gold

PC card drilling dimensions(after plating)

(thickness 1.60 ±0.20)

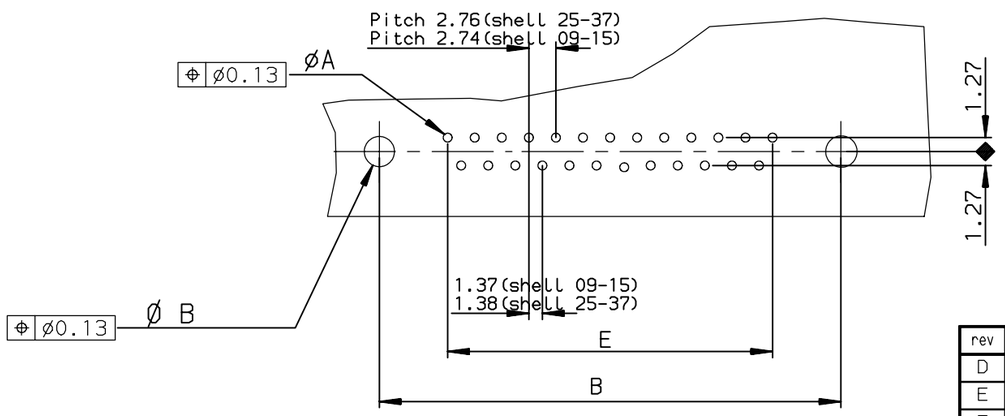

GENERAL CHARACTERISTICS AND ROHS INFORMATIONS:
SEE DRAWING C01-8646-0001

European Views

rev	ecn no	dr	date
D	-	MAS	1999/07/22
E	LS05-004	MPE	2005/02/08
F	LS06-0097	LGO	2006/07/28
G	LS06-0140	LGO	2006/09/22
-	-	-	-
-	-	-	-
-	-	-	-

www.fciconnect.com

surface ISO 1302 ✓ | tolerance std ISO 406 ISO 1101 | projection | mm

TOLERANCES UNLESS OTHERWISE SPECIFIED

Dr	PESSON	1997/05/15	ANGULAR	LINEAR	0.X	±0.1
Eng	PESSON	1997/05/15			0.XX	±0.1
Chr	LEGARE	1997/05/15	0.XX° ±2°		0.XXX	±0.1
Appr	LEGARE	1997/05/15	Product family			D-SUB

size A3 | Scale 2 | ECN LS06-0140 | Spec ref -

title: MALE CONNECTOR DELTA D EU
RIGHT ANGLE PRE

dwg no C01-8646-0543 | Rev. G

catalog no -

CUSTOMER | sheet 1 of 1

Copyright FCI.

REV F - 2006-04-17

PDM: Rev:G STATUS:Released Printed: Jan 18, 2011