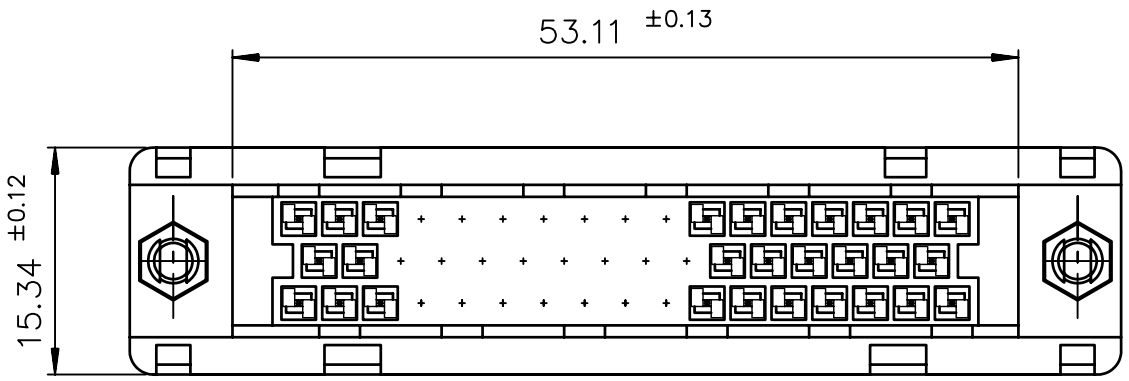

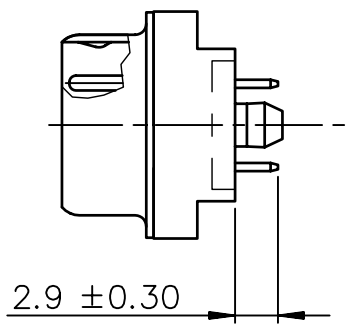

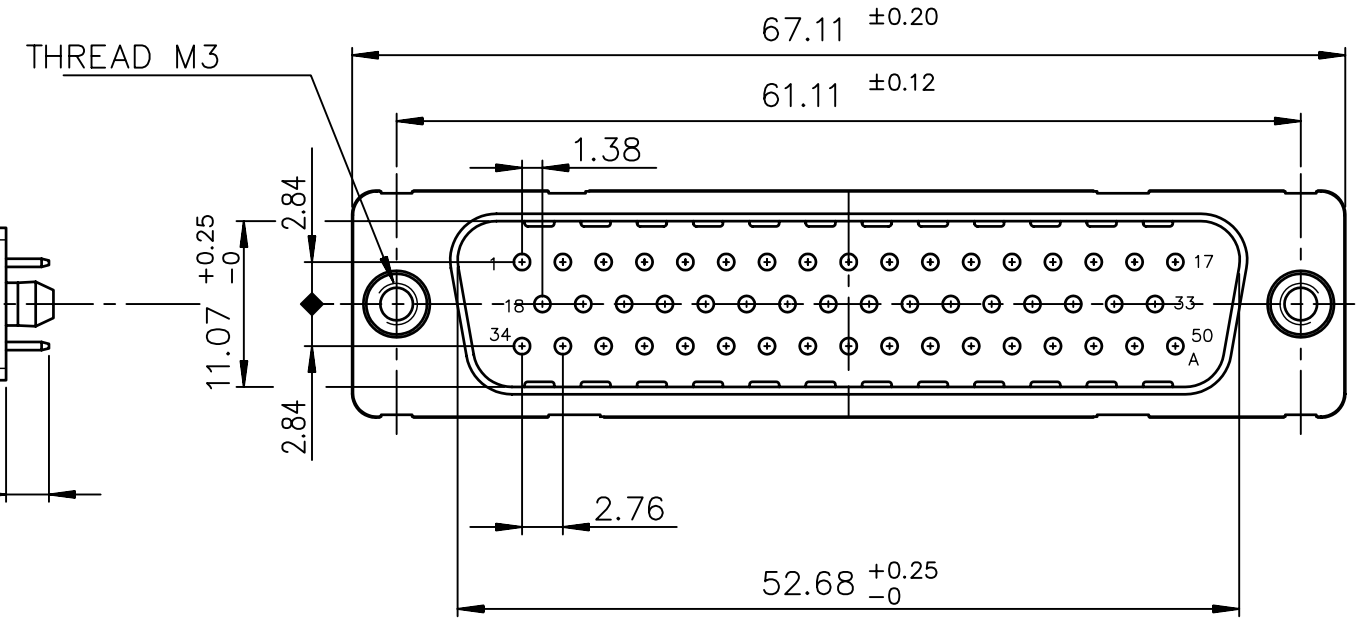

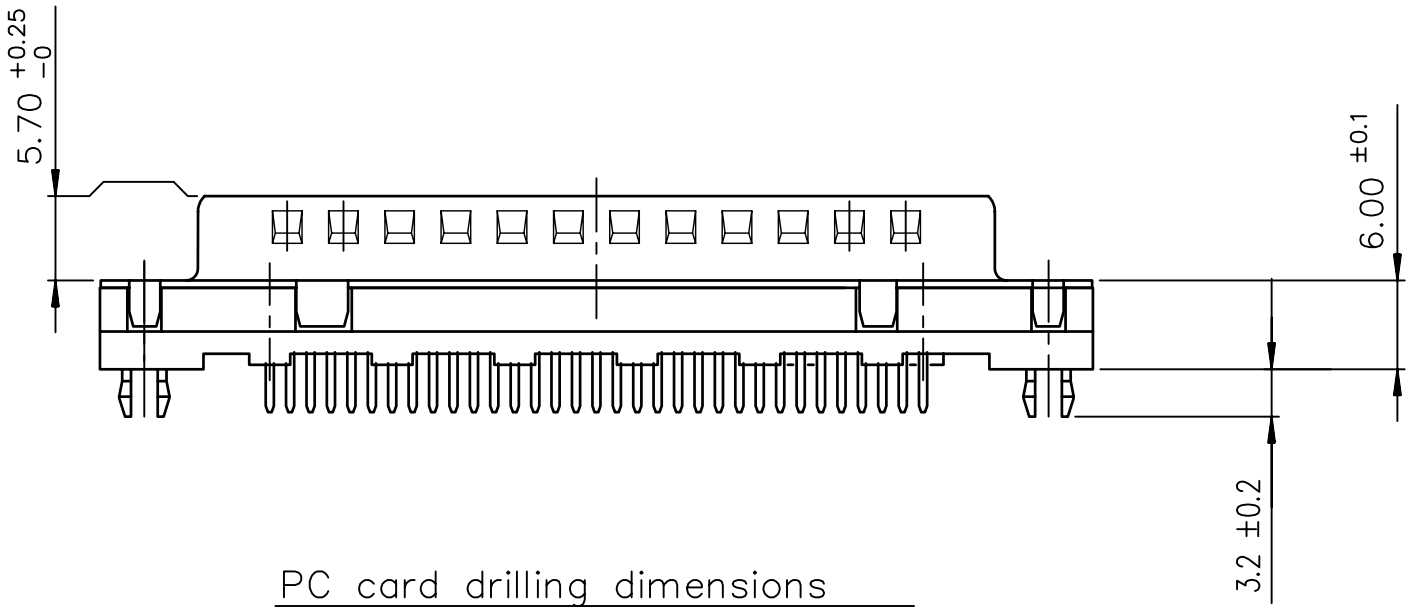

TIN LEAD PART NUMBER

Part number	D50P24A*GL00

Plating: 4 --> flash AU
Plating: 6 --> 0.76µ AU

LEAD FREE PART NUMBER

Part number	D50P24A*GL00LF

Plating: 4 --> flash AU
Plating: 6 --> 0.76µ AU

PC card drilling dimensions
(after plating – thickness: 1.60 mm)

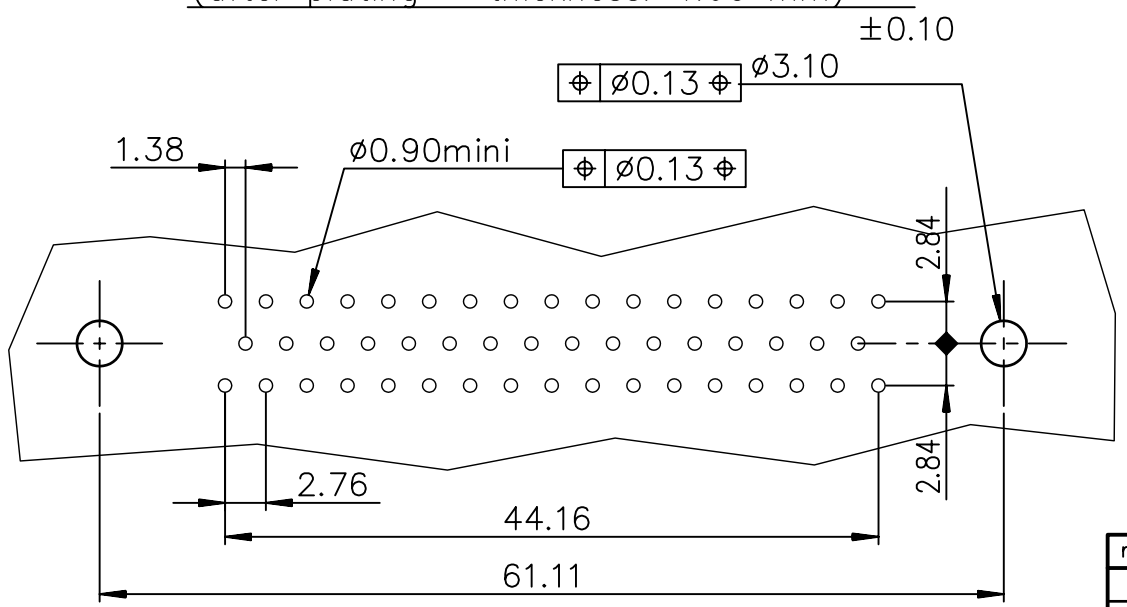

GENERAL CHARACTERISTICS AND ROHS INFORMATIONS:
SEE DRAWING C01-8646-0000

European Views

rev	ecn no	dr	date
A	–	BOU	1997/10/27
B	LS05-001	MPE	2005/03/14
C	LS06-0095	LGO	2006/07/20
D	LS08/0217	MPE	2008/11/25
E	I10-0059	NG	2010-02-23
–	–	–	–
–	–	–	–

www.fciconnect.com			surface ISO 1302	tolerance std ISO 406 ISO 1101	projection	mm
			TOLERANCES UNLESS OTHERWISE SPECIFIED			
Dr	BOUTTIER	1997/10/27	ANGULAR	LINEAR 0.X ±0.1	size A3	Scale 2
Eng	PESSON	1997/10/27		0.XX ±0.1		
Chr	NIRMAL GEORGE	2010-02-23	0.XX° ±2°	0.XXX ±0.1	ECN I10-0059	
Appr	SUDHIR VARMA	2010-02-23	Product family	D-SUB	Spec ref –	
title	MALE CONNECTOR DELTA D 50-EUROPE straight solder,harpoon.nut			dwg no	C01-8646-0586	Rev. E
catalog no	–			CUSTOMER	sheet 1 of 1	

Copyright FCI.

Printed: Jan 18, 2011
STATUS: Released
PDM: Rev:E

REV F – 2006-04-17