DO NOT SCALE PRINT

Honeywell

5A TO 25A MULTI - RANGE CURRENT SENSOR

CATALOGUE LISTING
CSNE381

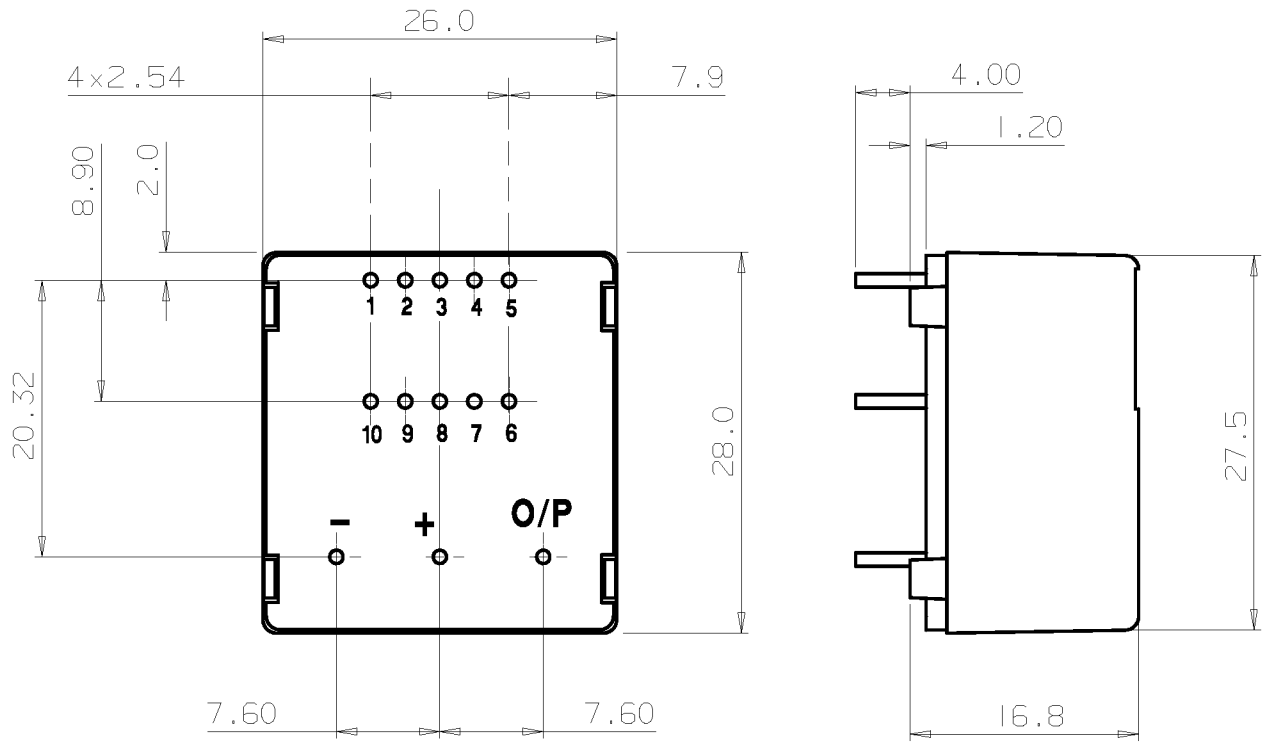

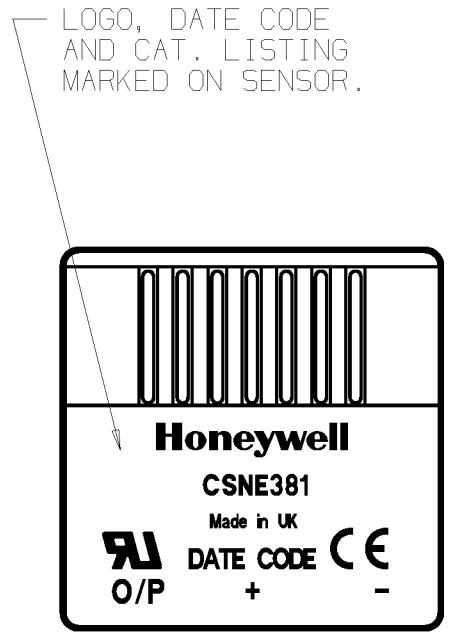

RECOMMENDED P.C.B. HOLE :- Ø1.2

ELECTRICAL SCHEMATIC

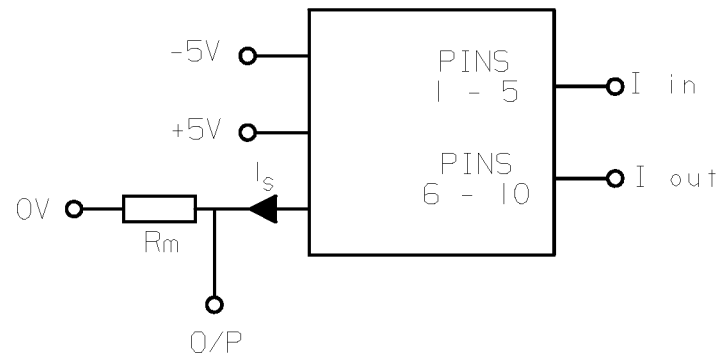

DESCRIPTION

CSNE381 IS A MULTI-RANGE CURRENT SENSOR MODULE BASED ON THE 'NULL BALANCE' HALL EFFECT PRINCIPLE. 5,6,8,12 OR 25A CAN BE MEASURED BY SELECTING THE APPROPRIATE 1 TO 5 PRIMARY TURNS.

ELECTRICAL DATA

NOMINAL PRIMARY CURRENT Ipn:- 25A rms
MEASURING RANGE Ip:- 0 TO ±36A
LOAD RESISTANCE:- Rm min Rm max
±25A.t max 0Ω 84Ω
+36A.t max 0Ω 38Ω

SUPPLY VOLTAGE:- ±5V (±5%)
DIELECTRIC STRENGTH:- 5.0KVrms/50Hz/1min.
CURRENT CONSUMPTION:- 10 + Is mA
PRIMARY INTERNAL RESISTANCE:- <1.25mΩ/TURN
SECONDARY INTERNAL RESISTANCE:- 66Ω MAX AT +70°C.

ACCURACY DATA

OFFSET :- ±0.05 mA TYP.
±0.15 mA MAX.
OFFSET DRIFT WITH TEMP.:- ±0.17mA TYP.
±0.6mA MAX.
LINEARITY:- ±0.2% Ipn
RESPONSE TIME :- <1µS
FREQUENCY:- DC TO 150KHz

ENVIROMENTAL DATA

OPERATING TEMP.:- 0 TO +70°C
STORAGE TEMP.:- -40 TO +90°C

PRIMARY TURNS	PRIMARY CURRENT		NOM. OUTPUT CURRENT (mA) Is	PRIMARY RESISTANCE (mΩ)	PRIMARY INSERTION INDUCTANCE (µH)	PIN CONNECTIONS
	NOM. Ipn (A)	MAX. Ip (A)				
1	25	36	25	0.3	0.023	5 4 3 2 1 IN; 6 7 8 9 10 OUT
2	12	18	24	1.1	0.09	5 4 3 2 1 IN; 6 7 8 9 10 OUT
3	8	12	24	2.5	0.21	5 4 3 2 1 IN; 6 7 8 9 10 OUT
4	6	9	24	4.4	0.37	5 4 3 2 1 IN; 6 7 8 9 10 OUT
5	5	7	25	6.3	0.58	5 4 3 2 1 IN; 6 7 8 9 10 OUT

THE COPYRIGHT OF THIS DRAWING IS THE PROPERTY OF HONEYWELL LTD. THE DRAWING IS SUPPLIED IN CONFIDENCE AND MUST NOT BE USED FOR ANY PURPOSE OTHER THAN THAT FOR WHICH IT IS SUPPLIED.

THIRD ANGLE PROJECTION

MODIFY ON CAD3D SYSTEM ONLY

SCALE :- 2:1

DIMENSIONS ARE IN MILLIMETRES

CSNE381

DRAWING NUMBER

ISSUE 4

12/94

DRAWN W.JOHNSTON
CHECK
DESIGN
AUTHOR'N