THIS DRAWING IS UNPUBLISHED. RELEASED FOR PUBLICATION -.- .
© COPYRIGHT - BY TYCO ELECTRONICS CORPORATION. ALL RIGHTS RESERVED.

LOC	DIST
GP	00

REVISIONS

P	LTR	DESCRIPTION	DATE	DWN	APVD
	R	REVISED PER ECO-06-010443	28AUG06	JRP	SB

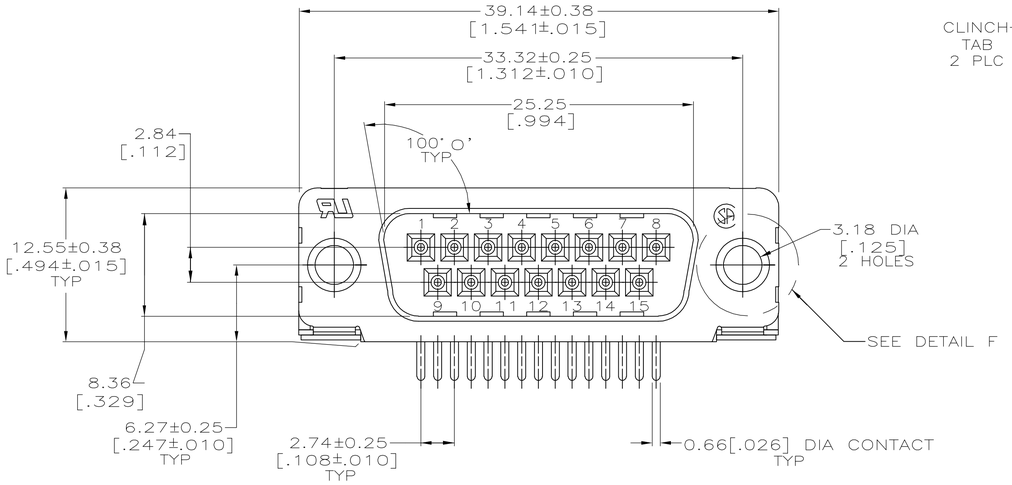

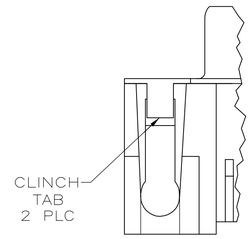

DETAIL B

1. NYLON OR POLYESTER, FLAME RETARDANT, UL 94V-0 RATED, GLASS FILLED, BLACK.
2. BRASS PER MIL-C-50.
3. CARBON STEEL PER ASTM A109.
4. GOLD PLATING PER MIL-G-45204; NICKEL PLATING PER QQ-N-290; TIN PLATING PER MIL-T-10727; COPPER PLATING PER MIL-C-14550.
5. 2.54μm [.000100] MIN TIN OVER 1.27μm [.000050] MIN COPPER.
6. 5.08μm[.000200] MIN TIN OVER COPPER FLASH.
7. GOLD PLATED FOR A LENGTH OF 3.81[.150] MIN FROM MATING END, GOLD FLASH IN MATED AREA, 2.54μm [.000100] MIN TIN OR TIN-LEAD FOR A LENGTH OF 3.56[.140] MIN FROM OPPOSITE END, BOTH OVER 1.27μm[.000050] MIN NICKEL.
8. GOLD PLATED FOR A LENGTH OF 3.81[.150] MIN FROM MATING END, 0.76μm [.000030] MIN GOLD IN MATED AREA, 2.54μm[.000100] MIN TIN OR TIN-LEAD FOR A LENGTH OF 3.56[.140] MIN FROM OPPOSITE END, BOTH OVER 1.27μm[.000050] MIN NICKEL.
9. OBSOLETE PART NUMBER.
10. SUPERSEDED BY 747236-2.
11. SUPERSEDED BY 747236-6.

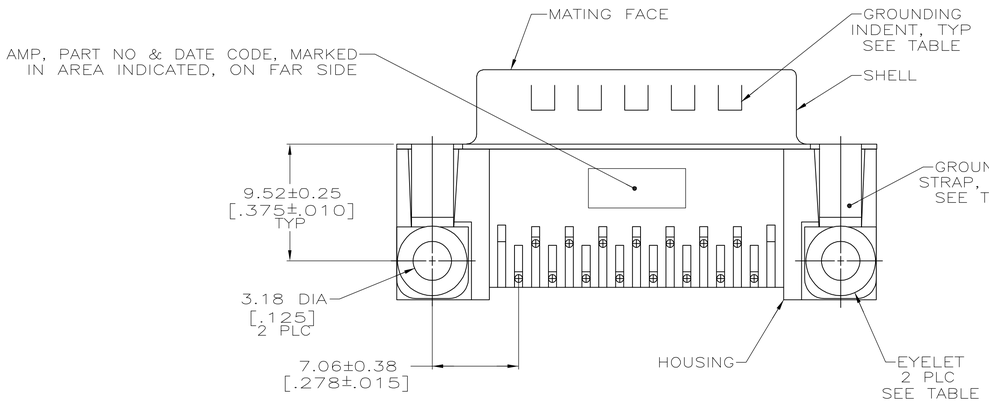

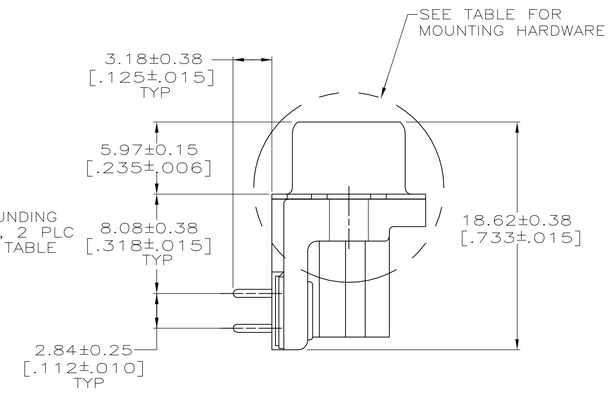

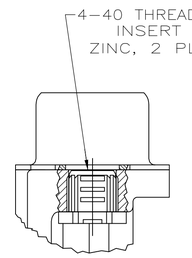

DETAIL D

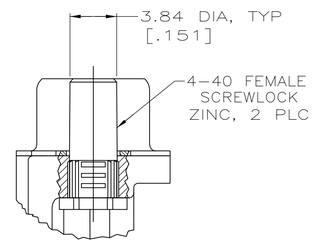

DETAIL E

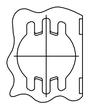

FOR -5,-6,-11 AND -12 ONLY

DETAIL F
2 PLC

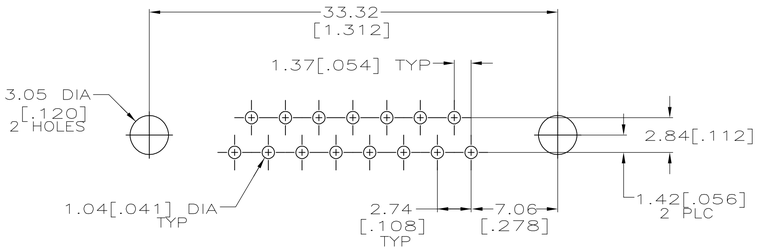

P.C. BOARD MOUNTING DIMENSIONS

NO	YES	YES	–	8	10 1-747236-3
YES	NO SEE DETAIL B	NO	SEE DETAIL E	8	9 1-747236-2
				7	9 1-747236-1
			SEE DETAIL D	8	9 1-747236-0
				7	9 747236-9
			–	8	9 747236-8
				7	9 747236-7
	YES	YES	SEE DETAIL E	8	747236-6
				7	11 747236-5
			SEE DETAIL D	8	747236-4
				7	9 747236-3
			–	8	9 747236-2
				7	10 747236-1
GROUNDING INDENTS	GROUNDING STRAPS	EYELETS	MOUNTING HARDWARE	CONTACT FINISH	PART NUMBER

THIS DRAWING IS A CONTROLLED DOCUMENT.

DIMENSIONS: mm [INCHES]

TOLERANCES UNLESS OTHERWISE SPECIFIED:
0 PLC ± –
1 PLC ± –
2 PLC ± –
3 PLC ± 0.13[.005]
4 PLC ± –
ANGLES ± –

MATERIAL
HOUSING: 1
SHELL: 2 CONTACTS: 3
EYELETS: BRASS

FINISH: 4 CONTACTS: SEE TABLE
SHELL: 2 CONTACTS: 4
INSERTS: CLEAR CHROMATE
SCREWLOCKS: CLEAR CHROMATE

DWN W.G. LENKER 05 OCT 89
CHK R. STONE 05 FEB 90
APVD M.D. GALLOWAY 05 FEB 90 NAME

PRODUCT SPEC 108-40025
APPLICATION SPEC 114-40010
WEIGHT –

tyco Electronics
Tyco Electronics Corporation
Harrisburg, PA 17105-3608

PLUG ASSEMBLY, SIZE 2, 15 POSITION, RIGHT ANGLE, FRONT METAL SHELL, .318 SERIES, AMPLIMITE HD-20

SIZE	CAGE CODE	DRAWING NO	RESTRICTED TO
A1	00779	C-747236	

CUSTOMER DRAWING

SCALE 4:1 SHEET 1 OF 1 REV R

OBSOLETE
NOT THE LATEST REVISION