THIS DRAWING IS UNPUBLISHED. RELEASED FOR PUBLICATION - , - .
© COPYRIGHT - By - ALL RIGHTS RESERVED.

LOC	DIST
AD	0

REVISIONS

P	LTR	DESCRIPTION	DATE	DWN	APVD
	Z1	REVISED PER ECO-11-005027	12MAR11	RK	HMR

1. RECEPTACLE ACCEPTS A .008-.014 THICK I.C. LEAD.
2. TUBE LOADED FOR AUTOMATIC INSERTION.
3. TWO .000030 MIN THK. GOLD STRIPES IN CONTACT AREA WITH TIN-LEAD (93/7) ON CONTACT LEGS, BALANCE OF CONTACT NICKEL PLATED.
4. TWO .000015 MIN THK. GOLD STRIPES IN CONTACT AREA WITH TIN-LEAD (93/7) ON CONTACT LEGS, BALANCE OF CONTACT NICKEL PLATED.
5. MAXIMUM DIMENSION FOR I.C. SEATING PLANE.

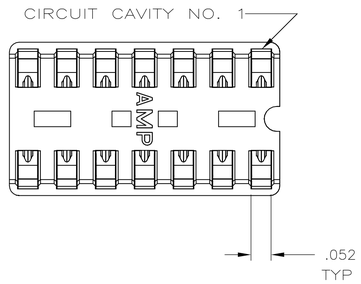

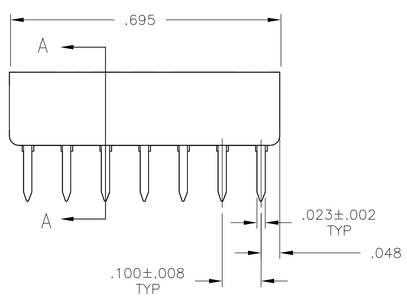

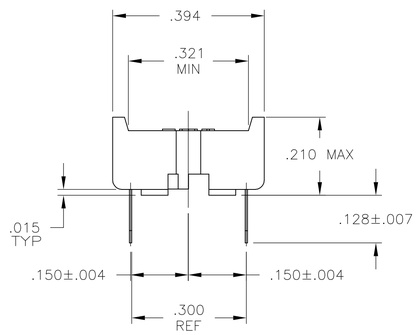

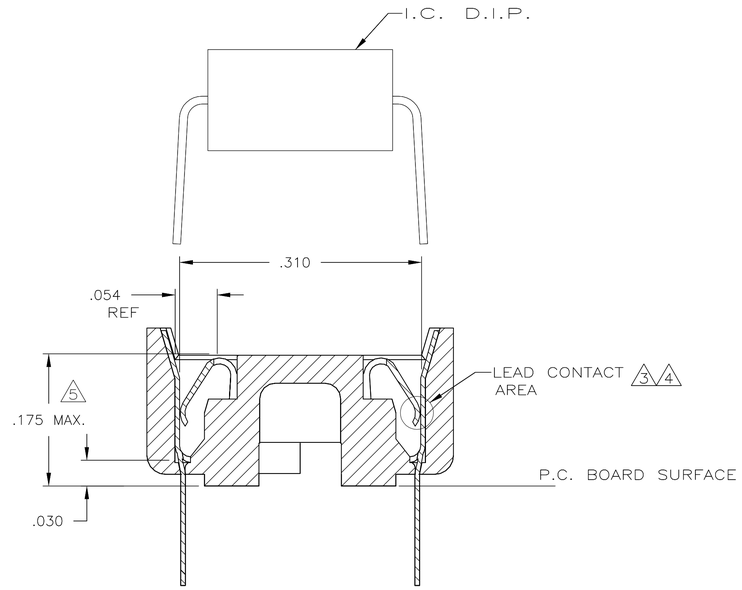

SECTION A-A
SCALE 10:1

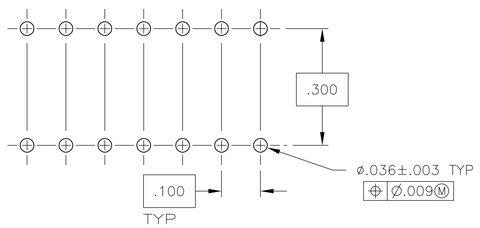

RECOMMENDED MOUNTING HOLE PATTERN
SCALE 4:1

	CONTACT FINISH	CONTACT MAT'L	HOUSING MATERIAL	PART NO.
	4	PHOS.BRZ. .006 THK	GLASS-FILLED THERMOPLASTIC, 94V-O, BLACK	2-640357-4
SUPSD BY 390261-3	TINNED	PHOS.BRZ. .006 THK	GLASS-FILLED THERMOPLASTIC, 94V-O, BLACK	2-640357-3
OBSOLETED	3	BE.CU. .006 THK	GLASS-FILLED THERMOPLASTIC, 94V-O, BLACK	2-640357-2
SUPSD BY 390261-3	TINNED	BE.CU. .006 THK	GLASS-FILLED THERMOPLASTIC, 94V-O, BLACK	2-640357-1

THIS DRAWING IS A CONTROLLED DOCUMENT.

DIMENSIONS: INCHES

TOLERANCES UNLESS OTHERWISE SPECIFIED:
0 PLC ± -
1 PLC ± -
2 PLC ± -
3 PLC ± .005
4 PLC ± -
ANGLES ± -

MATERIAL: SEE TABLE
FINISH: SEE TABLE

DWN M.CYRUS 20FEB87
CHK R.MILLER 20 FEB 87
APVD J.LAMBERT 20 FEB 87
PRODUCT SPEC 108-1066
APPLICATION SPEC 114-1049
WEIGHT -

TE Connectivity

NAME: SOCKET ASSY, DIP, 14 POS, DIPLOMATE DL -

SIZE	CAGE CODE	DRAWING NO	RESTRICTED TO
A1	00779	C-640357	-

CUSTOMER DRAWING | SCALE 5:1 | SHEET 1 OF 1 | REV Z1

4805 (3/11)