REV.	DESCRIPTION	DATE
A	NEW DRAWING	11/9/2005
B	Updated model	4/13/2006

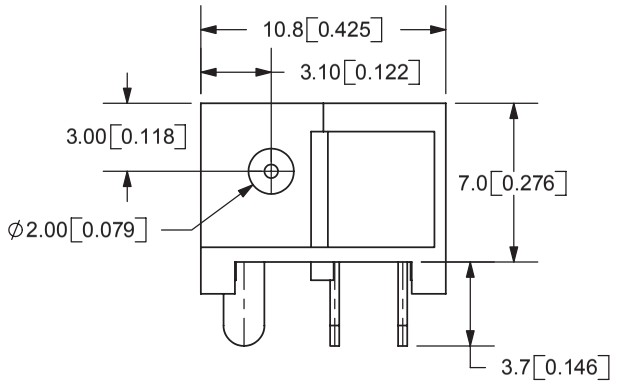

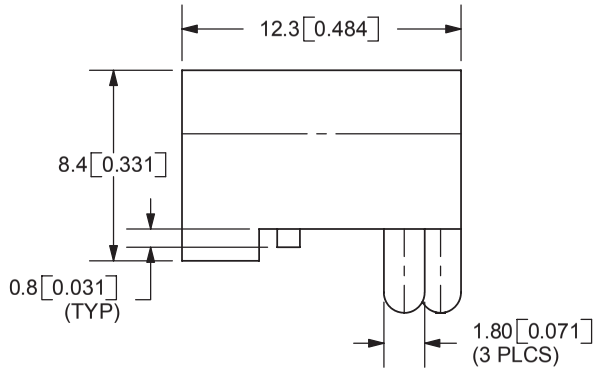

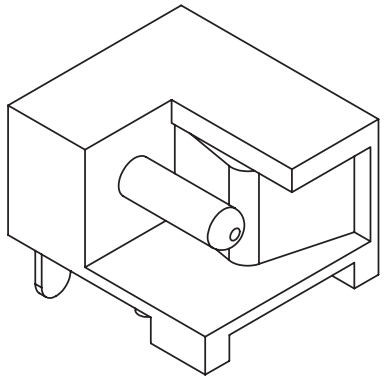

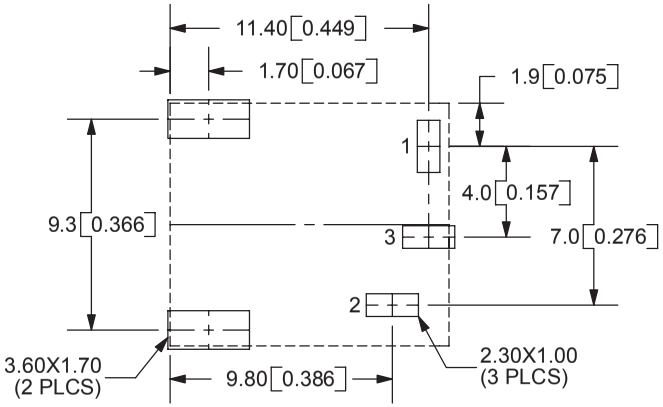

PCB LAYOUT
TOP VIEW

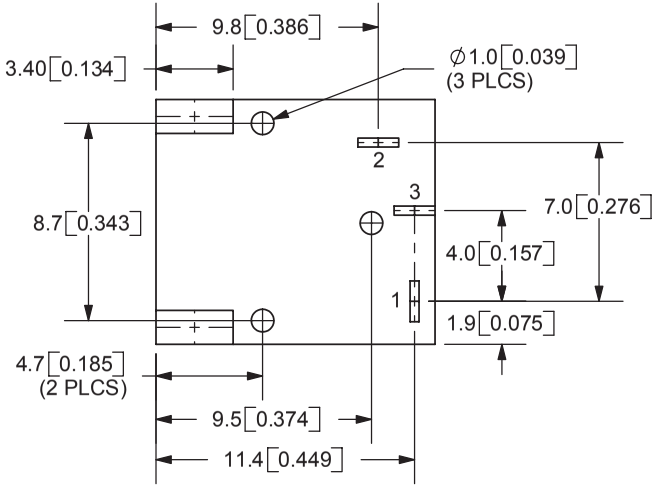

TOLERANCE:
X.X ±0.2mm
X.XX ±0.1mm
X.XXX ±0.05mm

RoHS

SPECIFICATIONS:
RATING: 16V DC @ 2.5A
CONTACT RESISTANCE: 30m OHMS MAX
INSULATION RESISTANCE: 50M OHMS MIN: 500V DC
VOLTAGE WITHSTAND: 500V AC R.M.S. FOR 1 MINUTE
LIFE: 5,000 CYCLES
OPERATING TEMP: -25° ~ +85°C

MODEL NO.	PJ-003A
SCHEMATIC	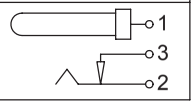

CENTER PIN DIAMETER 2.0mm Dia.

	MATERIAL	PLATING
CENTER PIN	Copper	Nickel
TERMINAL 1	Brass	Tin
TERMINAL 2	Copper Alloy	Tin
TERMINAL 3	Brass	Tin
HOUSING	PBT	

CUI INC
9615 SW Allen Blvd., Ste. 103
Beaverton, OR 97005
Phone: 503-643-4899
800-275-4899
Fax: 503-372-1266
Website: www.cui.com

TITLE: DC POWER JACK		REV: B
PART NO. PJ-003A	UNITS: MM [INCHES]	
DRAWN BY: ZRJ	APPROVED BY:	SCALE: 2:1

PC FILE NAME: PJ-003A

COPYRIGHT 2006 BY CUI INC.