PART NUMBER	ITEM 1 BODY	ITEM 2 CONTACT	ITEM 3 INTERFACE	ITEM 4 INSULATOR	ITEM 5 CRIMP SLEEVE	ITEM 6 END CAP
133-8434-101	BRASS GOLD PL .00001 MIN OVER NICKEL PL .00005 MIN OVER COPPER PL .00005 MIN	BERYLLIUM COPPER GOLD PL .00003 MIN OVER NICKEL PL .00005 MIN OVER COPPER PL .00005 MIN	BERYLLIUM COPPER GOLD PL .00003 MIN OVER NICKEL PL .00005 MIN OVER COPPER PL .00005 MIN	TEFLON	COPPER GOLD PL .00001 MIN OVER NICKEL PL .00005 MIN OVER COPPER PL .00005 MIN	BRASS GOLD PL .00001 MIN OVER NICKEL PL .00005 MIN OVER COPPER PL .00005 MIN

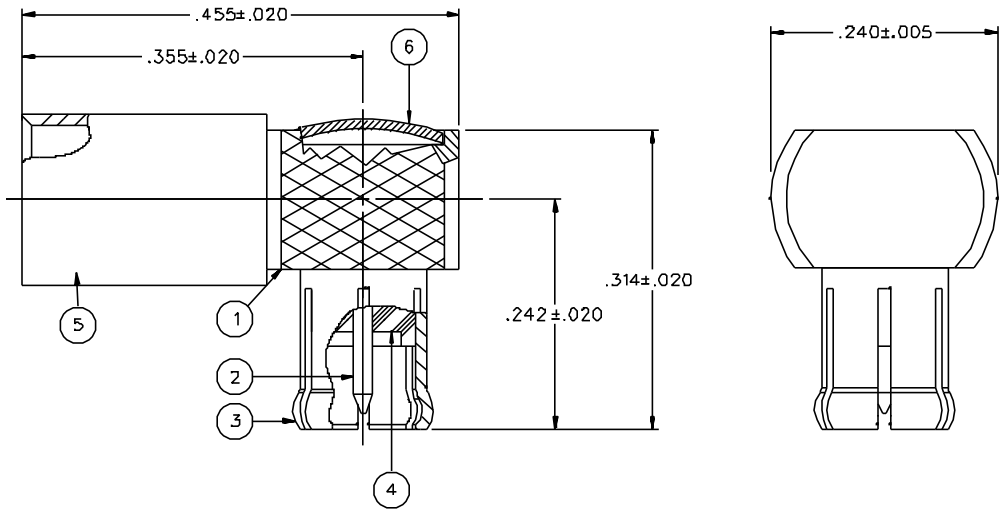

NOTES:

1. SPECIFICATIONS:

IMPEDANCE: 75 OHMS
FREQUENCY RANGE: 0-6 GHz
VSWR: 1.07+.04F MAX (F IN GHz)
WORKING VOLTAGE: 335 VRMS MAX AT SEA LEVEL
DIELECTRIC WITHSTANDING VOLTAGE: 1000 VRMS MIN AT SEA LEVEL
INSULATION RESISTANCE: 1000 MEGOHM MIN
CONTACT RESISTANCE:
CENTER CONTACT - INITIAL 5 MILLIOHM MAX, AFTER ENVIRONMENTAL 15 MILLIOHM MAX
OUTER CONDUCTOR - INITIAL 1 MILLIOHM MAX, AFTER ENVIRONMENTAL 1.5 MILLIOHM MAX
BODY TO CABLE - INITIAL 1 MILLIOHM MAX, AFTER ENVIRONMENTAL NOT APPLICABLE
CORONA LEVEL: 250 VOLTS MINIMUM AT 70,000 FEET
INSERTION LOSS: .2 DB MAX AT 1 GHz
RF LEAKAGE: -55 DB AT 2.5 GHz
RF HIGH POTENTIAL WITHSTANDING VOLTAGE: 700 VRMS AT 4 AND 7 MHz

MECHANICAL:

ENGAGE/DISENGAGE FORCE: 5.6 LBS MAX ENGAGEMENT
1.0/8.0 LBS MIN/MAX DISENGAGEMENT
CONTACT RETENTION FORCE: 2.3 LBS MIN AXIAL FORCE
CONTACT RETENTION TORQUE: NOT APPLICABLE
COUPLING MECHANISM RETENTION: NOT APPLICABLE
CABLE ACCEPTABILITY: RG 179 2X BRAID, RG 187 2X BRAID
CABLE HEX CRIMP SIZE: .151
CABLE RETENTION: 25 LBS MIN AXIAL FORCE
DURABILITY: 500 CYCLES MIN

ENVIRONMENTAL:

(MEETS OR EXCEEDS THE APPLICABLE PARAGRAPH OF MIL-C-39012)
THERMAL SHOCK: MIL-STD-202, METHOD 107, CONDITION B
OPERATING TEMPERATURE: -65 DEG C TO 165 DEG C
CORROSION: MIL-STD-202, METHOD 101, CONDITION B
SHOCK: MIL-STD-202, METHOD 102, CONDITION B
VIBRATION: MIL-STD-202, METHOD 204, CONDITION B

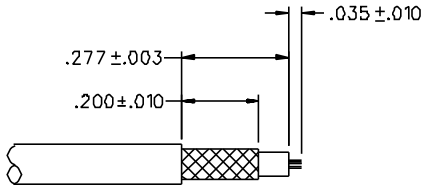

CABLE STRIP DIMENSIONS

4:1

DRAWING NO.
C - 133-8434-101/110

0	REVISIONS			
ENGINEERING RELEASE				
1	6-30-99	RH	TK	7-12-99 ECN 46511
VERSION UPDATE				
2	10-4-99	RH	AK	10-6-99 ECN 46601

CHANGED: 1.0/8.0 LBS MIN/MAX DISENGAGE WAS 3.0 LBS TYPICAL, 1.0 LB MIN

* REVISION NUMBER FOLLOWED BY AN ALPHA CHARACTER INDICATES DRAWING CLARIFICATION OR PART NUMBER ADDITION ONLY. *

2a	10-19-00	RH	AJ	ECN 47361

CUSTOMER DRAWING

THIS DRAWING TO BE INTERPRETED PER ANSI Y 14.5M - 1982

"μSTATION"

COMPANY CONFIDENTIAL

TOLERANCE UNLESS OTHERWISE SPECIFIED	DRAWN BY T.A.KARI	DATE 2-17-99	Johnson Components 299 Johnson Ave. P.O. Box 1732 Waseca, MN 56093-0832
DECIMALS .XX ___ .XXX ___ mm	CHECKED BY	DATE	TITLE PLUG ASSEMBLY RIGHT ANGLE, RG 179 2X BRAID MCX 75 OHM
MATL	APPROVED BY TAK	DATE 7-1-99	
FINISH	APPROVED BY RJB	DATE 7-2-99	CODE NO. / DRAWING NO. C - 133-8434-101/110
	RELEASE DATE 7-12-99		SCALE 10:1 / U/M INCH / SHEET 2 OF 2