PART NUMBER	ITEM ① BODY	ITEM ② CONTACT	ITEM ③ INSULATOR
135-9701-211	COPPER ALLOY GOLD PL .00005 MIN OVER COPPER PL .00005 MIN	BERYLLIUM COPPER GOLD PL .00005 MIN OVER COPPER PL .00005 MIN	TEFLON

DRAWING NO.
C – 135-9701-211/220

0	REVISIONS						
ENGINEERING RELEASE							
1	10-6-08	PAT	BTW	TAK	MJU	TJS	10-13-08 ECN 51660

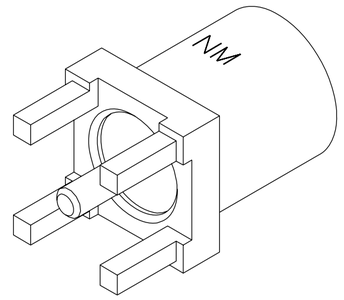

10:1

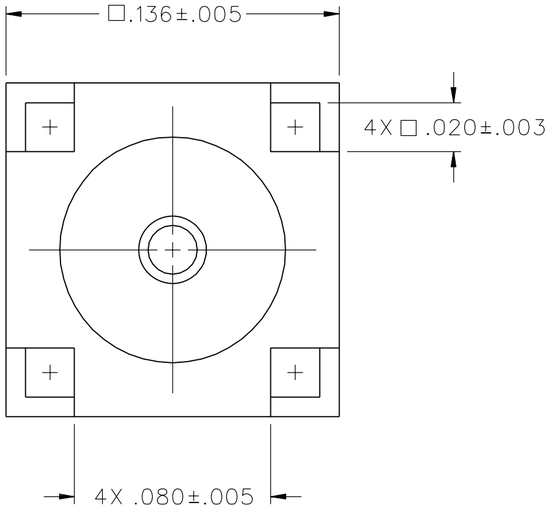

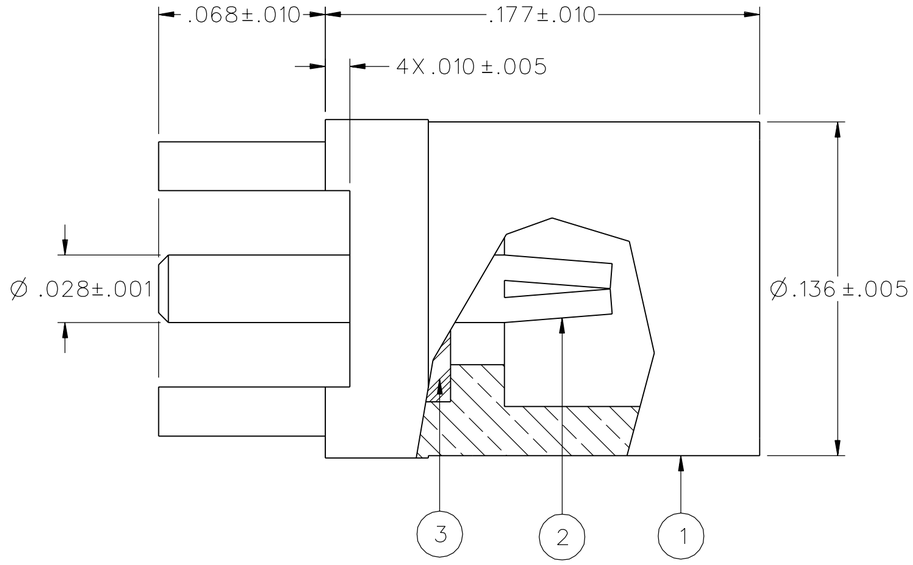

NOTES:

1. SPECIFICATIONS:

IMPEDANCE: 50 OHMS
FREQUENCY RANGE: 0-6 GHz
VSWR: NOT APPLICABLE
WORKING VOLTAGE: 170 VRMS MAX AT SEA LEVEL
DIELECTRIC WITHSTANDING VOLTAGE: 500 VRMS MIN AT SEA LEVEL
INSULATION RESISTANCE: 1000 MEGOHM MIN
CONTACT RESISTANCE:
CENTER CONTACT - INITIAL 5.0 MILLIOHM MAX, AFTER ENVIRONMENTAL 8.0 MILLIOHM MAX
OUTER CONDUCTOR - GOLD PLATED INITIAL 1 MILLIOHM MAX, AFTER ENVIRONMENTAL 1.5 MILLIOHM MAX
NICKEL PLATED INITIAL 2.5 MILLIOHM MAX, AFTER ENVIRONMENTAL 3.5 MILLIOHM MAX
BRAID TO BODY - NOT APPLICABLE
CORONA LEVEL: 190 VOLTS MINIMUM AT 70,000 FEET
INSERTION LOSS: NOT APPLICABLE
RF LEAKAGE: NOT APPLICABLE
RF HIGH POTENTIAL WITHSTANDING VOLTAGE: 400 VRMS AT 4 AND 7 MHZ

MECHANICAL:

ENGAGE/DISENGAGE FORCE: 8 LBS MAX ENGAGEMENT
1.4 LBS MIN DISENGAGEMENT
CONTACT RETENTION FORCE: 2.0 LBS MIN AXIAL FORCE
CONTACT RETENTION TORQUE: NOT APPLICABLE
COUPLING MECHANISM RETENTION: NOT APPLICABLE
CABLE ACCEPTABILITY: NOT APPLICABLE
CABLE HEX CRIMP SIZE: NOT APPLICABLE
CABLE RETENTION: NOT APPLICABLE
DURABILITY: 500 CYCLES MIN

ENVIRONMENTAL:

(MEETS OR EXCEEDS THE APPLICABLE PARAGRAPH OF MIL-PRF-39012)
THERMAL SHOCK: MIL-STD-202, METHOD 107, CONDITION C
EXCEPT -55 DEG C TO 155 DEG C
OPERATING TEMPERATURE: -55 DEG C TO 155 DEG C
CORROSION: MIL-STD-202, METHOD 101, CONDITION B
SHOCK: MIL-STD-202, METHOD 213, CONDITION B
VIBRATION: MIL-STD-202, METHOD 204, CONDITION D
MOISTURE: MIL-STD-202, METHOD 106

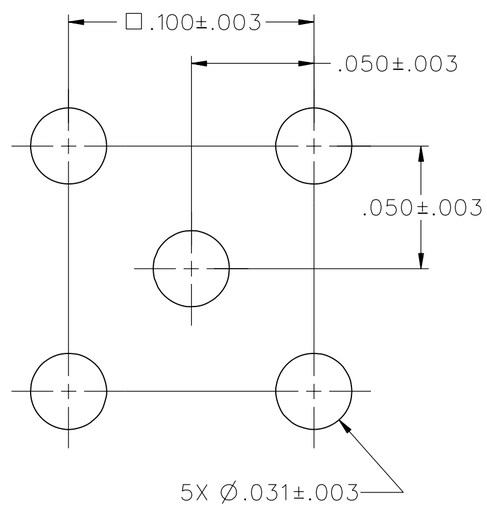

MOUNTING HOLE LAYOUT

CUSTOMER DRAWING

THIS DRAWING TO BE INTERPRETED PER ASME Y 14.5M - 1994

"μSTATION"

COMPANY CONFIDENTIAL

TOLERANCE UNLESS OTHERWISE SPECIFIED		DRAWN BY BTW	DATE 4-16-08
DECIMALS	mm	CHECKED BY TJS	DATE 10-13-08
.XX		APPROVED BY TAK	DATE 10-13-08
.XXX		RELEASE DATE	10-13-08
MATL		U/M INCH	SCALE 20:1
FINISH			

EMERSON. Network Power

Connectivity Solutions
P.O. Box 1732
Waseca, MN 56093
1-800-247-8256

TITLE
JACK ASSEMBLY
STRAIGHT PC MOUNT
NON-MAGNETIC MMCX

SHEET 2 OF 2

DRAWING NO.
C – 135-9701-211/220