DISK #	DWG SIZE	DATA CONTAINED IN THIS DOCUMENT IS PROPRIETARY TO TROMPETER ELECTRONICS INC. AND SHALL NOT BE DISCLOSED, COPIED OR USED FOR PROCUREMENT OR MANUFACTURE WITHOUT EXPRESS WRITTEN PERMISSION.
H 9	C	

REVISIONS			3-0273		SH 1
REV	EO	DESCRIPTION	DWN	APPROVED	DATE
E	9495	-1 AND -2 .090 WAS .070	AAH		10-28-91

DASH NO	MODEL NO	LTR CODE	A DIM	B DIM	C DIM	D DIM	E DIA
-1	CBBJR79TL	—	.24	.565	.050	.090	.0625
-2	CBBJR79TLA	A	.34	.665	.058	.090	.070

RED INDICATES ORIGINAL

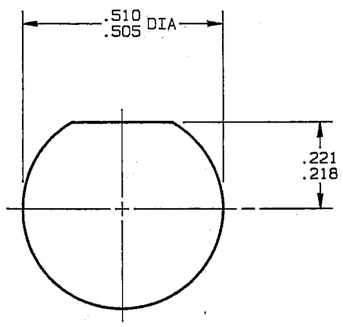

RECOMMENDED PANEL CUTOUT

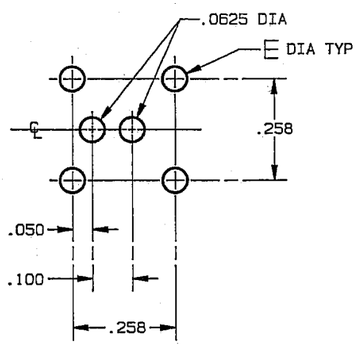

RECOMMENDED MTG HOLE PATTERN

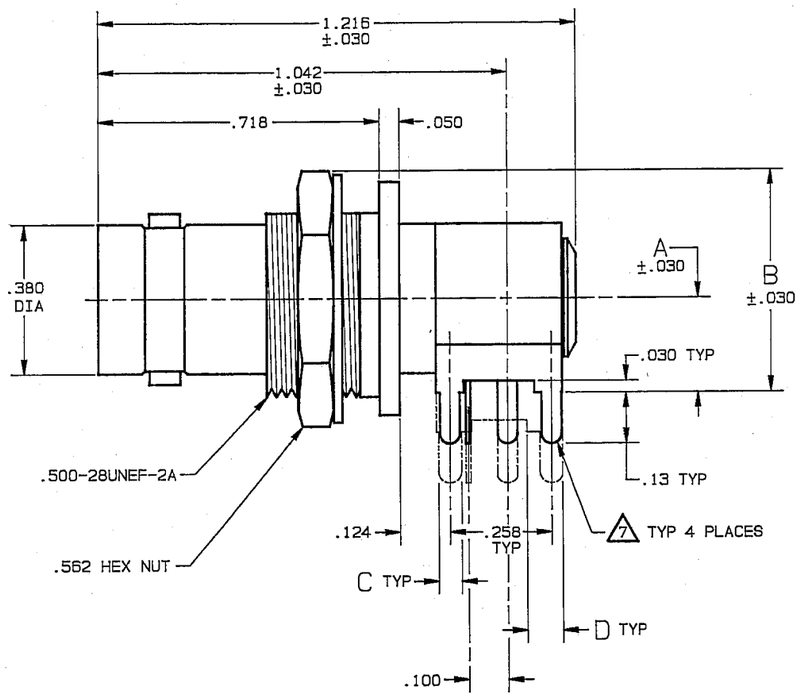

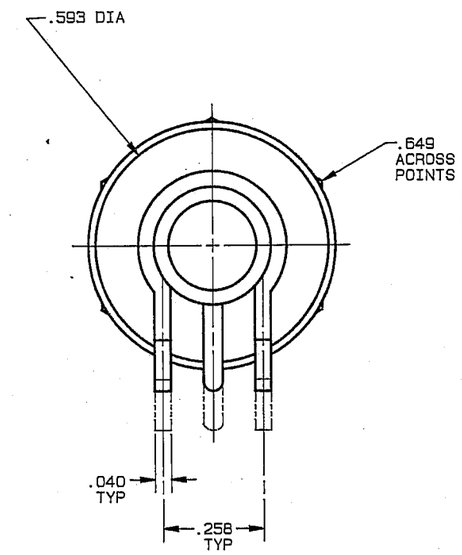

INCH	MM
.0010	0.03
.0015	0.04
.005	0.13
.030	0.76
.040	1.02
.050	1.27
.058	1.47
.060	1.52
.0625	1.59
.070	1.78
.090	2.29
.100	2.54
.124	3.15
.125	3.18
.13	3.30
.218	5.54
.221	5.61
.24	6.10
.258	6.55
.34	8.64
.380	9.65
.505	12.83
.510	12.95
.562	14.27
.565	14.35
.593	15.06
.649	16.48
.665	16.89
.718	18.24
1.042	26.47
1.216	30.89

7. PRE-TINNED, .0015 MAXIMUM THICKNESS WITH SN63 OR EQUIV SOLDER, PER QQ-S-571, TO WITHIN .060 MAXIMUM OF SHOULDER, AFTER PLATING

6. MAX PNL THK .125

5. LTR CODE "A" SHOWN IN PHANTOM

4. EXAMPLE OF COMPLETE MODEL NO:
   CBBJR79TL A
   - LTR CODE (SEE TABLE) 5
   - BASIC MODEL NO (SEE TABLE)

3. FINISH: TFS-1A (NICKEL)

2. CONCENTRIC TWINAX/TRIAX RIGHT ANGLE CIRCUIT BOARD AND BULKHEAD MOUNTING 2-LUG TRB SERIES RECEPTACLE

1. ALL DIM ARE IN INCHES

QTY	DESCRIPTION	PART NUMBER	ITEM

TOL UNLESS SPECIFIED .XX ± .XXX ±.005 .XXXX±.0010 ANGLES±	TROMPETER ELECTRONICS, INC.			CBBJR79TL / A	
DWN	AAH	10-17-91	MATERIAL ———	CODE IDENT 14949	DRAWING NO. 3-0273	REV E
CHK		10-22-91			
ENGR	KQ	10/25/91			
NEXT ASSY	APPR		10-25-91	SCALE 4/1	DATE 12-4-85	SHEET 1 OF 2