MICRO SWITCH
FREEPORT, ILLINOIS, U.S.A.
A DIVISION OF HONEYWELL
FED. MFG. CODE 91929

SWITCH-ENCLOSED

CATALOG LISTING
DTE6-2RN281

M

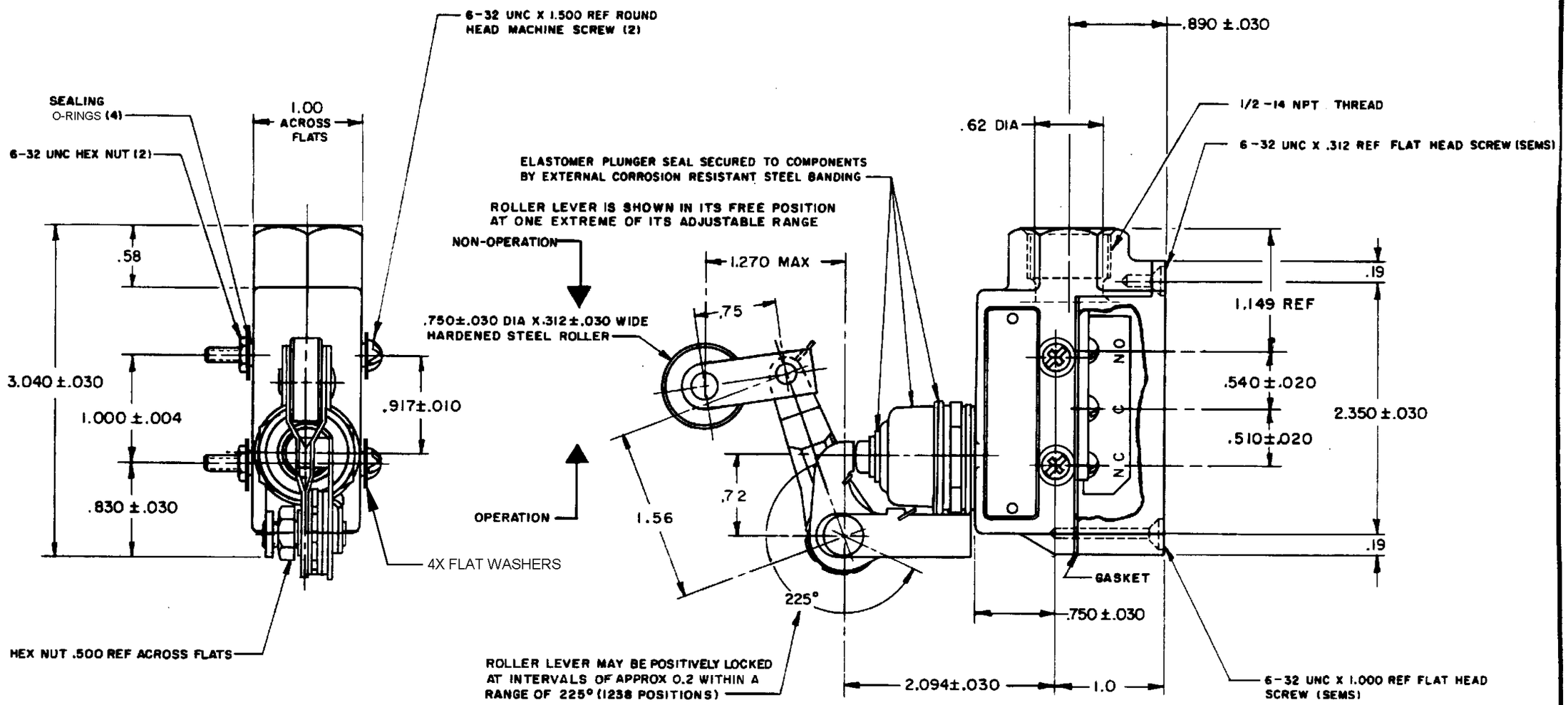

NOTE —

1 — 4-40 UNC X .125 REF TERMINAL SCREW AND LOCKWASHER(3)
2 — ROLLER LEVER BRACKET ASSEMBLY MAY BE SET AT ANY POSITION AROUND AXIS OF PLUNGER
3 - SEAL RATING : NEMA 1.3
IP 54

THIS DRAWING COVERS A PROPRIETARY ITEM AND IS THE PROPERTY OF MICRO SWITCH, A DIVISION OF MINNEAPOLIS-HONEYWELL REGULATOR CO. THIS DRAWING IS NOT TO BE COPIED OR USED WITHOUT THE APPROVAL OF MICRO SWITCH.

CHARACTERISTICS	ELECTRICAL DATA	SCALE FULL
OPERATING FORCE — — — 3 LB MAX	CONTACT ARRANGEMENT S P D T	DO NOT SCALE PRINT
RELEASE FORCE — — — — 6 OZ MIN PRETRAVEL — — — — — .312 MAX DIFFERENTIAL TRAVEL — — — .165 MAX OVERTRAVEL — — — — — .219 MIN	-L59- 10 A-125 OR 250 VAC 0.3 A-125 VDC ; 0.15 A-250 VDC	UNLESS OTHERWISE NOTED DIMENSIONS ARE IN INCHES TOLERANCES ARE: ONE PLACE (.0) ±.030 TWO PLACE (.00) ±.015 THREE PLACE (.000) ±.008 ANGLES ±
SWITCH-BASIC REPLACEMENT- DT-2R3-A7		WEIGHT .71 LB

REVISIONS		
A	CO 53191-D	KJS 1 MAR 84
B	CO55989	CJH 8 NOV 84
C	CO54958	TSK 26 FEB 85
D	CO72661	DAW 8 SEP 92
E	CO-77179B	KDR 21 FEB 94
F	0016895	VKR 18NOV05
G	0018962	VKR 14FEB06

DTE6-2RN281 — REPLACES
SR 12877 — RELEASE NO.
M — DRAWING NUMBER
14FEB06
8 — ISSUE
BP — CHECK
18NOV05
BP — CHECK
5 JUN 67
LSD — CHECK
5 JUNE 67 — DRAWN
MBF
FO-80378-003