MICRO SWITCH
FED. MFR. CODE 91929

SWITCH-ENCLOSED

CATALOG LISTING
DTE6-2RQ2

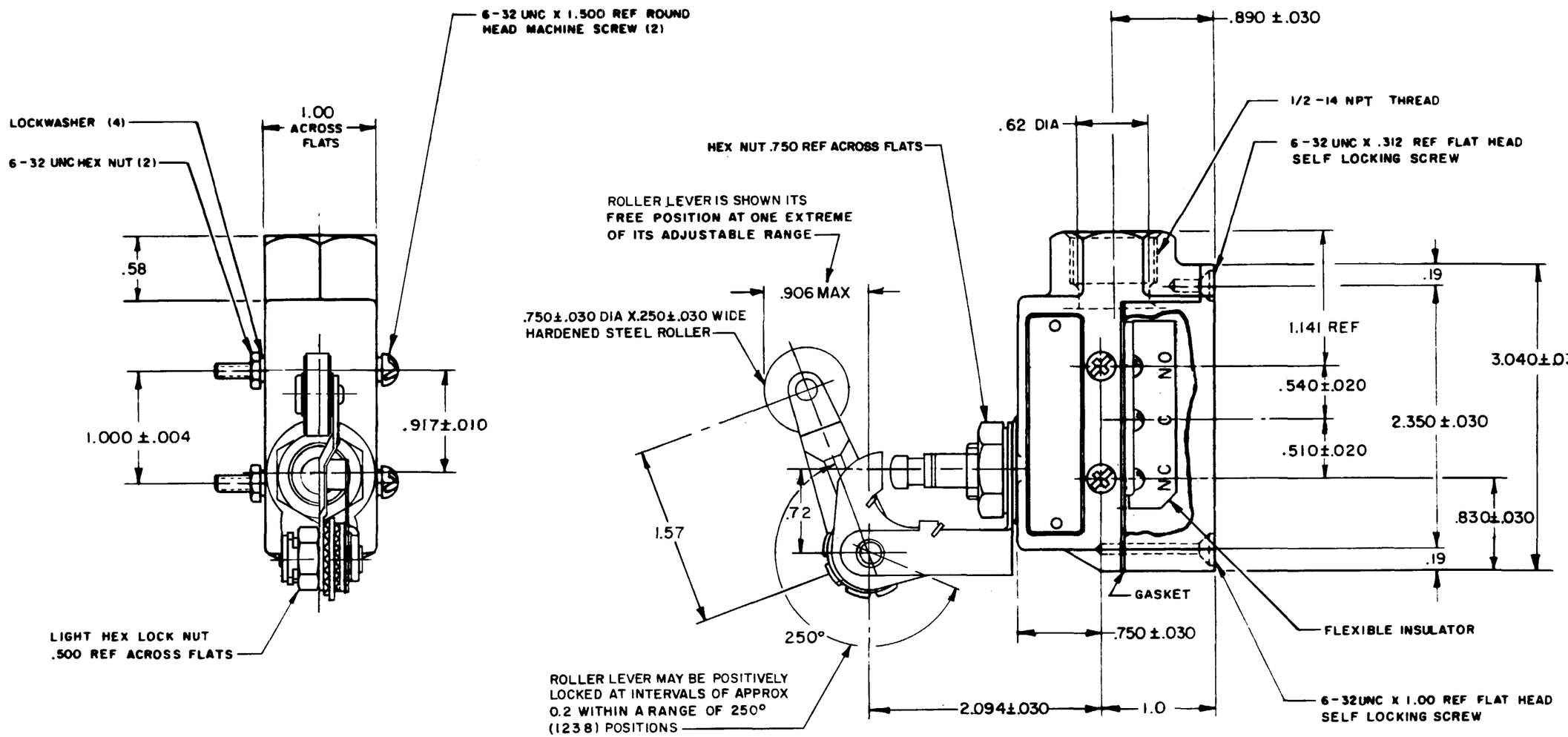

NOTE —

1 — 4-40 UNC X .125 REF TERMINAL SCREW AND LOCKWASHER (6)
2 — ROLLER LEVER BRACKET ASSEMBLY MAY BE SET AT ANY POSITION AROUND AXIS OF PLUNGER
3 - SEAL RATING: NEMA 1
IP40

THIS DRAWING COVERS A PROPRIETARY ITEM AND IS THE PROPERTY OF MICRO SWITCH, A DIVISION OF MINNEAPOLIS-HONEYWELL REGULATOR CO. THIS DRAWING IS NOT TO BE COPIED OR USED WITHOUT THE APPROVAL OF MICRO SWITCH

CHARACTERISTICS	ELECTRICAL DATA	
	CONTACT ARRANGEMENT: D P D T	SCALE FULL
		DO NOT SCALE PRINT
PRETRAVEL — — — — — — .266 MAX	-L59- 10 A-125 OR 250 VAC; 0.3 A-125 VDC; 0.15 A-250 VDC	UNLESS OTHERWISE SPECIFIED DIMENSIONS ARE IN INCHES
DIFFERENTIAL TRAVEL — — — .165 MAX		TOLERANCES ARE: ONE PLACE (.0) ±.030; TWO PLACE (.00) ±.015; THREE PLACE (.000) ±.005; ANGLES ±
OVERTRAVEL — — — — — .219 MIN		
SWITCH-BASIC REPLACEMENT - DT-2R3-A7		WEIGHT

DTE6-2RQ2	REPLACES		
M	RELEASE NO.	SR 12895	
DRAWING NUMBER	14FEB06		
ISSUE 10	BP	CHECK	17 JAN 64
	DAW	20 JAN 64	
	CHECK	KRB 10 NOV 05	
	DAW	20 JAN 64	
	CHECK	DAW 8 SEP 92	
	EB	20 JAN 64	
	CHECK	CJH 8 NOV 84	
	CHECK	TSK 26 FEB 85	
	MBF	17 JAN 64	

REVISIONS

A	SR 12895	MBF 15 JUNE 67
B	C025707	ORD 19 JAN 68
C	CO 53191-D	KJS 1 MAR 64
D	C055989	CJH 8 NOV 84
E	C054958	TSK 26 FEB 85
F	C072661	DAW 8 SEP 92
G	C081513B	JAK 5 MAR 97
H	0016894	KRB 10 NOV 05
J	0018962	VKR 14FEB06

FORMTEK