| REV. | J |
|---|---|

UNLESS OTHERWISE NOTED
DIMENSIONS ARE IN INCHES — TOLERANCES ARE:

| | | |
|---|---|---|
| ONE PLACE DECIMALS ± .1 [2.54] | THREE PLACE DECIMALS ± .005 [.13] | ANGLES ± 2° |
| TWO PLACE DECIMALS ± .01 [.25] | FOUR PLACE DECIMALS ± .0020 [.05] | |

TITLE: .050 x .050 EDGE MOUNT SOCKET STRIP DUAL ROW ASSEMBLY

DWG NO: EMF-1XX-XX-X-D

SHEET 1 OF 1

EMF-1XX-XX-XX-D

No OF POSITIONS
-05 THRU -50
(PER ROW)

LEAD STYLE
-01: EDGE MOUNT (.031")
*-02: EDGE MOUNT (.062")

* NOT RELEASED

BODY SPECIFICATION
-D: DOUBLE ROW
(USE SFM-XX-D-EM-XX)

PLATING SPECIFICATION
-F: FLASH SELECTIVE, 3 Au / 50 Ni MIN ON CONTACT, MATTE TIN TAIL
-L: LIGHT SELECTIVE, 10 Au / 50 Ni MIN ON CONTACT, MATTE TIN TAIL
-S: SELECTIVE, 30 Au / 50 Ni MIN ON CONTACT, MATTE TIN TAIL
-FM: FLASH SELECTIVE, 3 Au / 50 Ni MIN ON CONTACT, MATTE TIN TAIL
-LM: LIGHT SELECTIVE, 10 Au / 50 Ni MIN ON CONTACT, MATTE TIN TAIL
-SM: SELECTIVE, 30 Au / 50 Ni MIN ON CONTACT, MATTE TIN TAIL

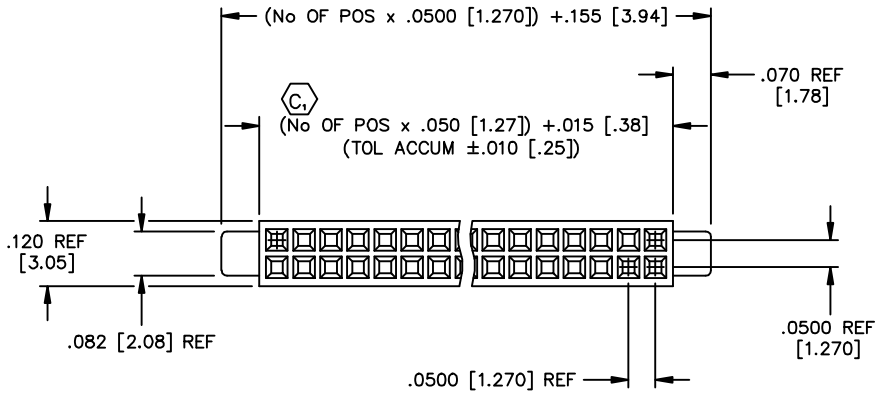


| TABLE 1 | | | |
|---|---|---|---|
| LEAD STYLE | BODY | CONTACT | "A" |
| -01 | SFM-XX-D-EM-01 | C-61-06-X | .126 [3.20] |
| * -02 | SFM-XX-D-EM-02 | C-61-08-X | .105 [2.67] |

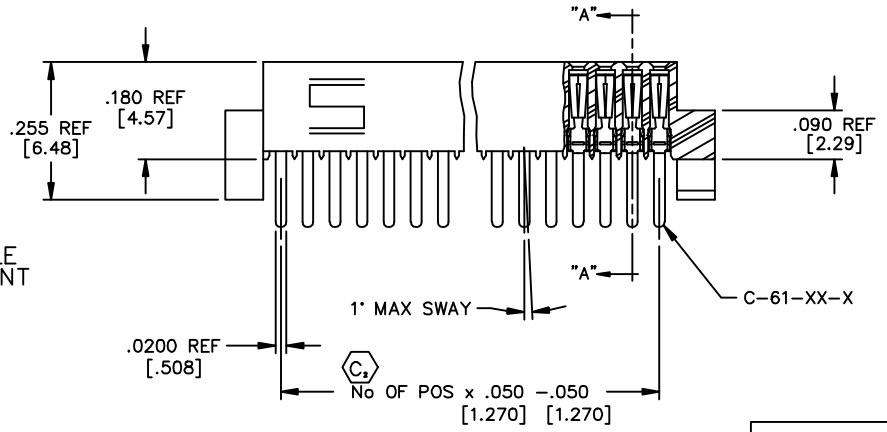


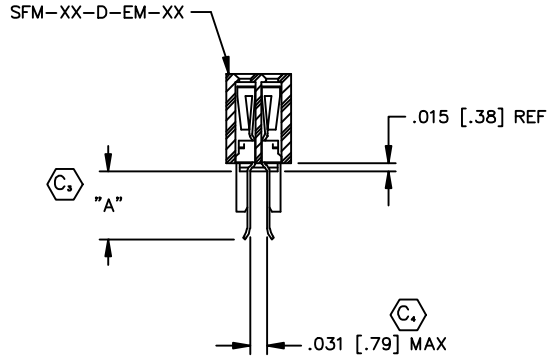


DO NOT SCALE FROM THIS PRINT

NOTES:
1. MINIMUM PUSHOUT FORCE: .5 lb.
2. C6 COPLANARITY; POS -15 THRU -26: .004 [.10]
   POS -27 THRU -50: .006 [.15]
3. C REPRESENTS CRITICAL A DIMENSION.
4. ALL POSITIONS TO BE PACKAGED IN TUBES.
5. INSULATOR MATERIAL: BLACK LCP, UL 94 VO.

PACKAGING VIEW

PT-1-24-01-43
TP-24

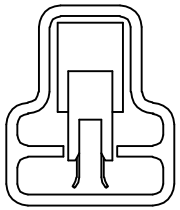


**PROPRIETARY NOTE**
THIS DOCUMENT CONTAINS INFORMATION CONFIDENTIAL AND PROPRIETARY TO SAMTEC INC. AND SHALL NOT BE REPRODUCED OR TRANSFERRED TO OTHER DOCUMENTS OR DISCLOSED TO OTHERS OR USED FOR ANY PURPOSE OTHER THAN THAT FOR WHICH IT WAS OBTAINED WITHOUT THE EXPRESSED WRITTEN CONSENT OF SAMTEC INC.


MISC\MKT
EMF-1XX-XX-XX-D-MKT


samtec
520 PARK EAST BLVD. NEW ALBANY, INDIANA 47150
PHONE (812) 944-6733 P.O. BOX 1147
CODE 55322


MADE BY: PURVIS 7-26-96

EMF-1XX-XX-X-D
SHEET 1 OF 1