MICRO SWITCH
A DIVISION OF MINNEAPOLIS-HONEYWELL REGULATOR COMPANY
FREEPORT, ILLINOIS
FED. MFR. CODE 91929

SWITCH—ENCLOSED

CATALOG LISTING
EX-AR20

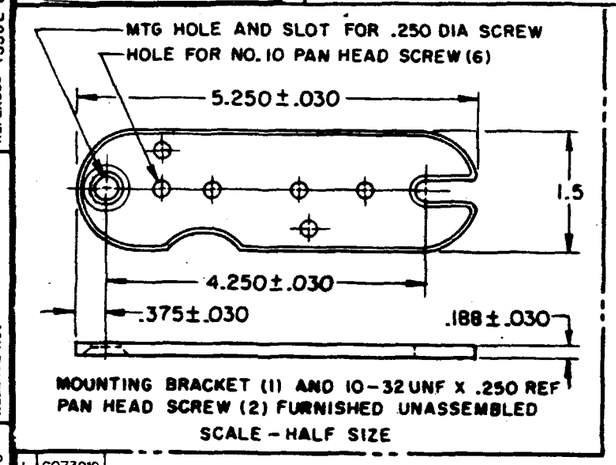

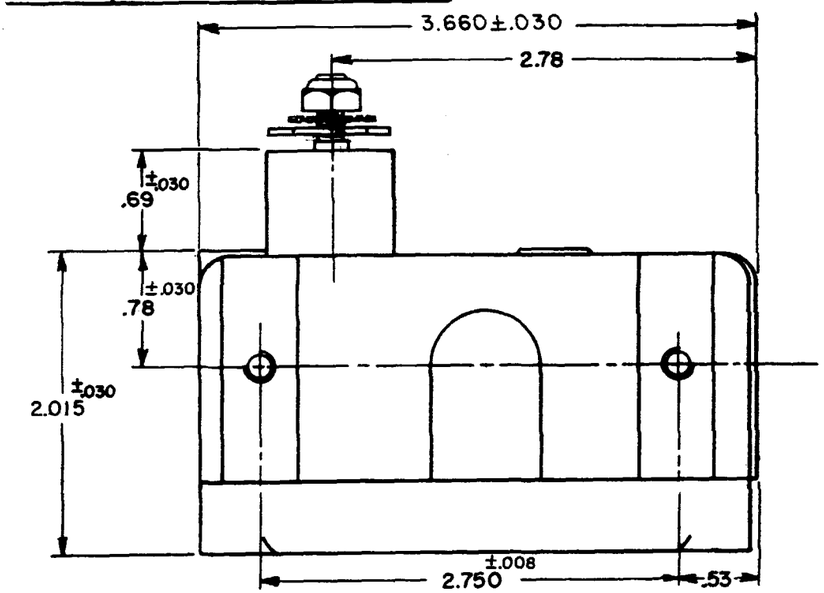

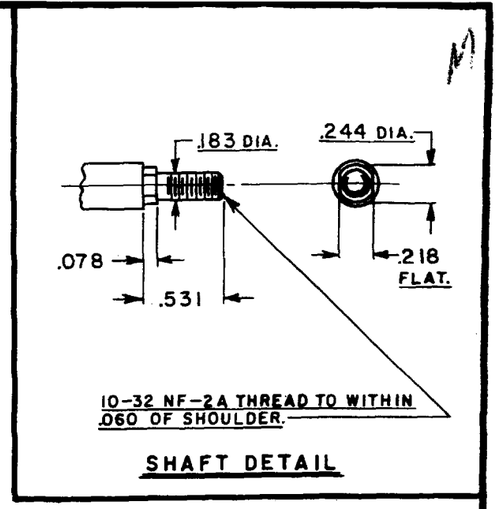

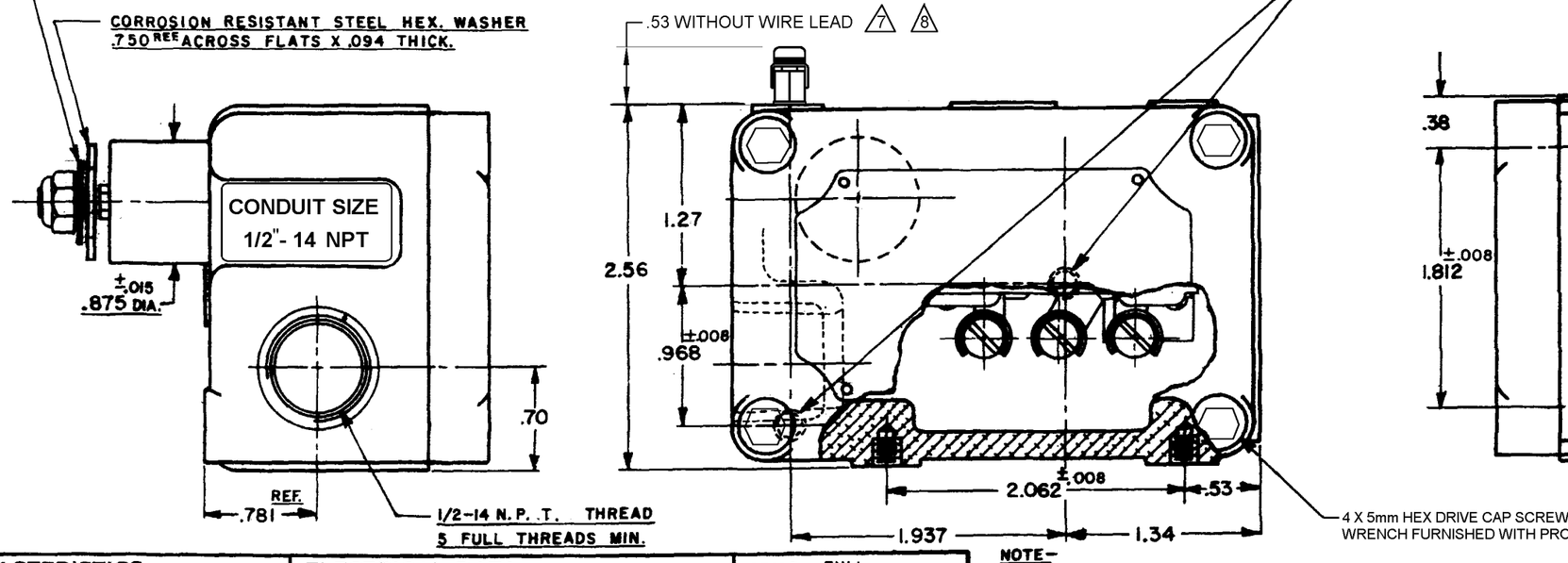

CHARACTERISTICS	
OPERATING TORQUE	12.5 OZ. IN. MIN.
OPERATING TORQUE	31.25 OZ. IN. MAX.
RELEASE TORQUE	6.25 OZ. IN. MIN.
PRETRAVEL	8° - .219 MAX.
DIFFERENTIAL TRAVEL	1/4° - .007 MAX.
OVERTRAVEL	DO NOT OVERTRAVEL MORE THAN 90°
SWITCH - BASIC REPLACEMENT	BZ-2R-P4

ELECTRICAL DATA	
CONTACT ARRANGEMENT	S.P.D.T.
-L96-	15 A-125, 250, OR 480 VAC 1/2 A-125 VDC; 1/4 A-250 VDC 1/8 HP-125 VAC; 1/4 HP-250 VAC

SCALE — FULL
DO NOT SCALE PRINT

UNLESS OTHERWISE SPECIFIED
DIMENSIONS ARE IN INCHES

TOLERANCES ARE:

ONE PLACE	(.0)	±.030
TWO PLACE	(.00)	±.015
THREE PLACE	(.000)	±.008
ANGLES		±1°

WEIGHT

NOTE-

1 - (8) MOUNTING SCREW HOLES, 10-32 NF-2B THREADS X .219 REF. DEEP.
2 - 8-32 NC X .219 REF. TERMINAL SCREWS AND CUPWASHERS.
3 - EXPLOSION PROOF - UNDERWRITERS LAB. INC. LISTED FOR HAZARDOUS LOCATIONS NEMA 7, CLASS I, GROUPS C AND D, NEMA 9, CLASS II, GROUPS E, F AND G.
4 - SWITCH OPERATES ON RIGHT HAND CLOCKWISE ROTATION.
5 - EUROPEAN HAZARDOUS LOCATIONS DESIGNATION: Ex d IIB + H2 T6 CATAGORY II 2 G
6 - SEAL RATING: NEMA 1
7 EXTERNAL GROUND SCREW MAY BE ASSEMBLED TO ANY UNUSED MOUNTING SCREW HOLE
8 ASSEMBLE PROVIDED SPLIT LOCKWASHER BETWEEN GROUND LUG AND HOUSING

THIS DRAWING COVERS A PROPRIETARY ITEM AND IS THE PROPERTY OF MICRO SWITCH, A DIVISION OF HONEYWELL. THIS DRAWING IS NOT TO BE COPIED OR USED WITHOUT THE APPROVAL OF MICRO SWITCH

EX-AR20 | (M) EX-AR20 | ISSUE 8 | REPLACES | RELEASE NO. | 27AUG10 | CMH | CHECK

DRAWING NUMBER M 21 | ISSUE

L	C073019 MAN 19 SEP 92
M	0012750 KR 26APR05
N	0068804 MBN 27AUG10

REVISIONS

A	CO 8520	K. A. F. 4 FEB. 57
B	CO 15608	M B F 9 DEC 61
C	CO 17653	HBW 22 FEB 64
D	CO 18276	M B F 15 JUNE 64
E	CO 19878	K. E. R 27 OCT 66
F	CO 26103	D L F 18 JUL 69
G	CO 31569	BLH 15 JUN 73
H	CO 50388	CBM 9 NOV 85
J	CO 61381	DAW 22 APR 87
K	CO 70715B	TSM 10 OCT 91

DRAWN K. A. F. 4 FEB. 57 | CHECK G.C.H. 12 FEB. 57 | CHECK A.C.C. 7 FEB 57 | CHECK | CHECK

RASTER 74-943