5

MICRO SWITCH
FREEPORT ILLINOIS, U.S.A
A DIVISION OF HONEYWELL, INC.
FED. MFG. CODE 91929

ACTUATOR-SWITCH

CATALOG LISTING
JV-317

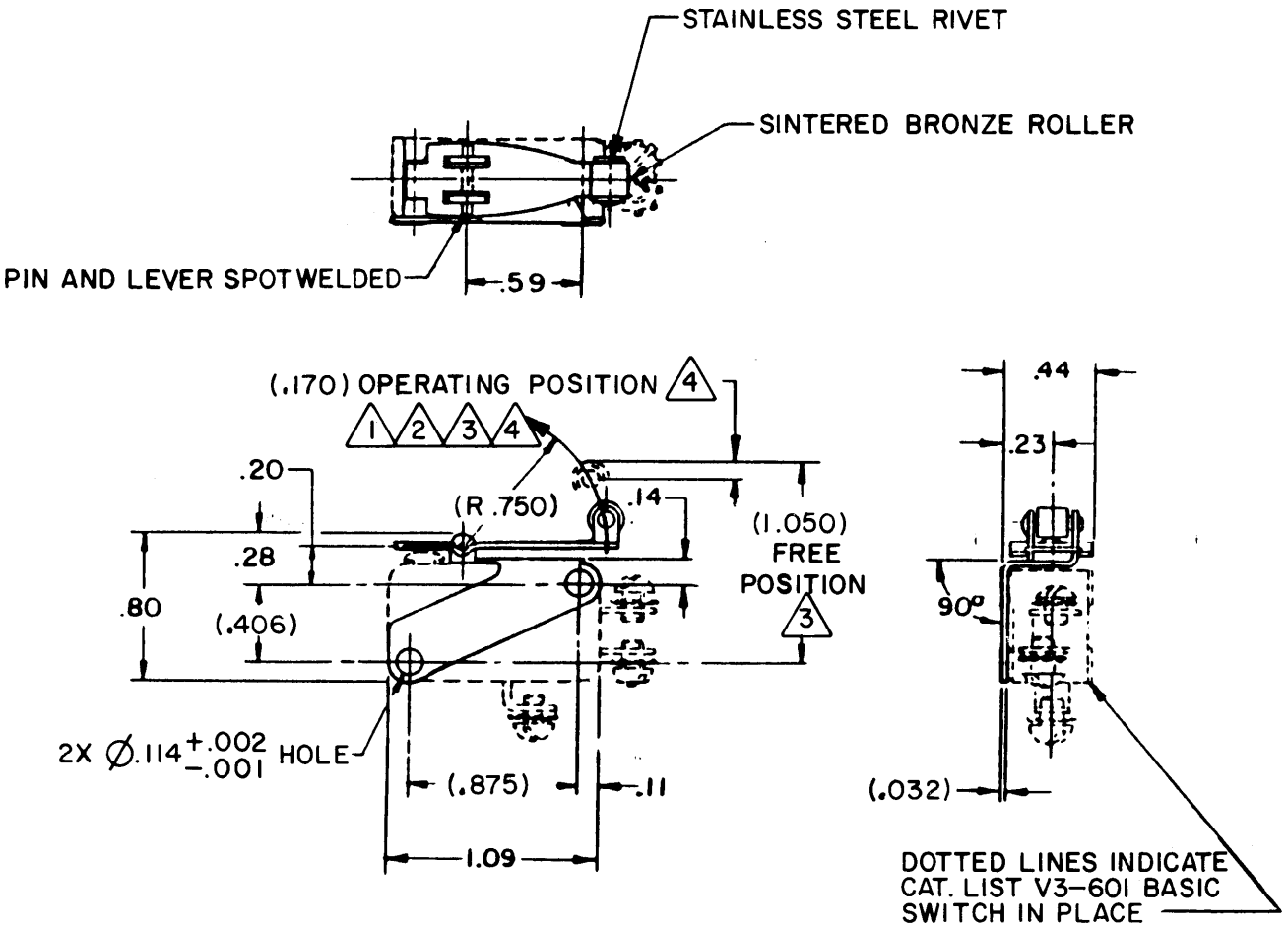

NOTES

1. REVERSE ACTUATION ACTUATOR (V3-601 BASIC NOT FURNISHED)
2. 1.050 REF FREE POSITION WITH BASIC SWITCH PLUNGER FULLY OVERTRAVELED A MINIMUM RETURN FORCE OF .5 OZ REQUIRED UPWARD AT THE .75 RADIUS BY AN EXTERNAL RETURN FORCE MECHANISM
3. .170 APPROX TRAVEL DOWNWARD FROM THE 1.050 REF FREE POSITION TO OPERATE BASIC SWITCH
4. ACTUATOR WILL NOT NECESSARILY RELEASE TYPE V3-601 BASIC WITHOUT CUSTOMER ADJUSTMENT OF ACTUATOR LEVER

THIS DRAWING COVERS A PROPRIETARY ITEM AND IS THE PROPERTY OF MICRO SWITCH, A DIVISION OF HONEYWELL. THIS DRAWING IS NOT TO BE COPIED OR USED WITHOUT THE APPROVAL OF MICRO SWITCH.

THIRD ANGLE PROJECTION

CHARACTERISTICS	ELECTRICAL DATA	SCALE FULL	DO NOT SCALE PRINT
	CONTACT ARRANGEMENT	UNLESS OTHERWISE SPECIFIED TOLERANCES ARE	
		ONE PLACE (.0) ±.030	
		TWO PLACE (.00) ±.015	
		THREE PLACE (.000) ±.005	
		ANGLES ±2°	
		RAW MATERIAL – COMMERCIAL STANDARD	
		DIMENSIONS ARE IN INCHES AND ARE TO BE MET BEFORE PROTECTIVE COATINGS ARE APPLIED	
		WEIGHT .013 LB MAX	

REPLACES	X-98480-JV	
RELEASE NO.	PR-21181	
DRAWING NUMBER	JV-317	
ISSUE	M	
	1	
CHECK		
REVISIONS		
CHECK		
CHECK	13 JUN 94	DAW
CHECK		
DRAWN	9 JUN 94	JAL

FO-52848-B