MICRO SWITCH
a Honeywell Division
FED. MFG. CODE 91929

SWITCH - ENCLOSED

CATALOG LISTING
LSQ300

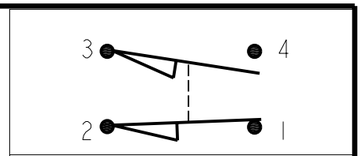

CIRCUIT DIAGRAM

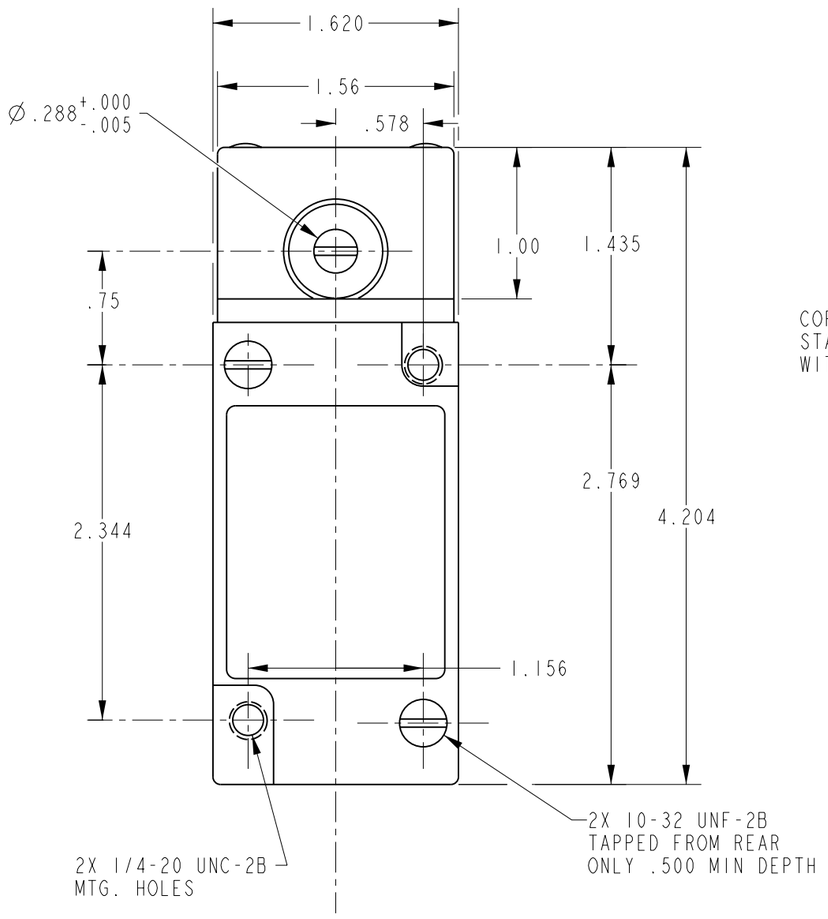

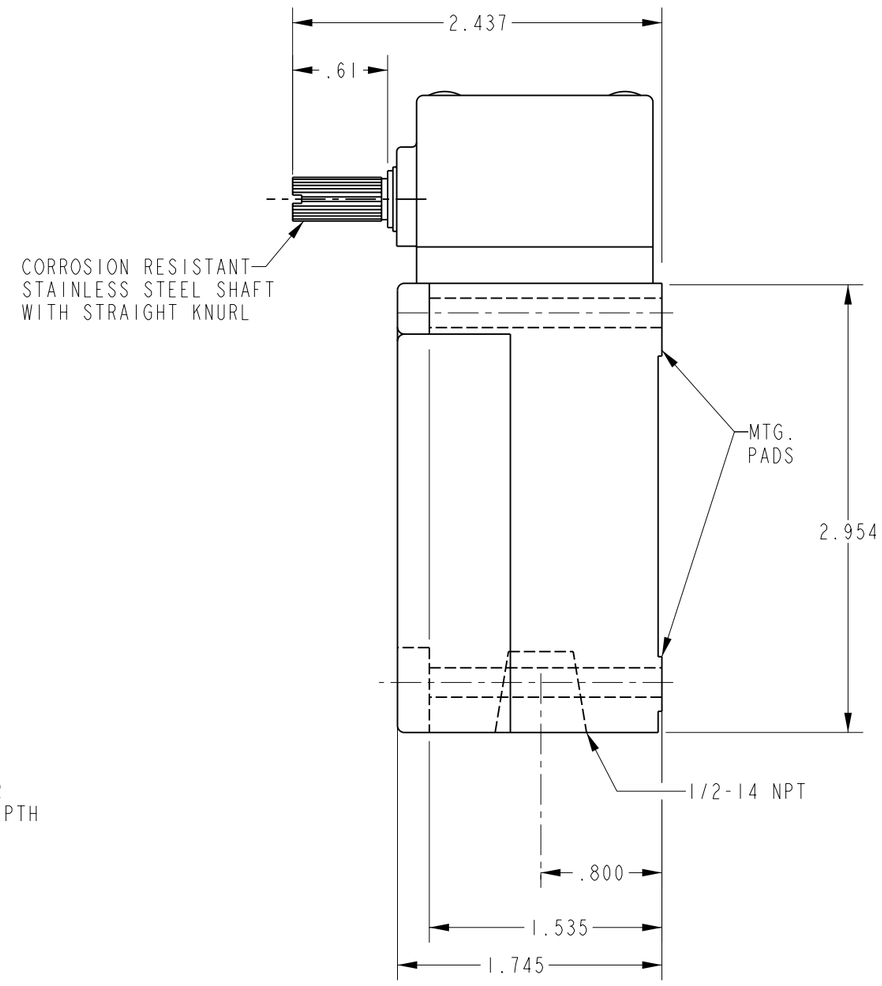

NOTES

1 - SWITCH USES FLUOROSILICONE SEALS IN OPERATING HEADS ONLY

THIS DRAWING COVERS A PROPRIETARY ITEM AND IS THE PROPERTY OF MICRO SWITCH. A DIVISION OF HONEYWELL. THIS DRAWING IS NOT TO BE COPIED OR USED WITHOUT THE APPROVAL OF MICRO SWITCH

THIRD ANGLE PROJECTION

SCALE FULL

DO NOT SCALE PRINT

UNLESS OTHERWISE SPECIFIED TOLERANCES ARE

ONE PLACE	(.0)	±.030
TWO PLACE	(.00)	±.015
THREE PLACE	(.000)	±.005
ANGLES		±

WEIGHT

ANSI Y14.5M-1982 APPLIES

CHARACTERISTICS	
OPERATING TORQUE	4 IN LBS MAX
PRETRAVEL	55°
CONTACT TRANSFER	60°
SEGMENT POSITION	90°
TOTAL SHAFT ROTATION	360° CW OR CCW

ELECTRICAL DATA

CONTACT ARRANGEMENT
SPDT

LSQ300
CATALOG LISTING
PAGE 1 OF 1
RELEASE NO. PR-22474
REPLACES
ISSUE 1
CHECK
REVISIONS
CHECK
CHECK
CHECK
DRAWN GLH 30 OCT 96
PTC/CAD