**MICRO SWITCH**
A DIVISION OF MINNEAPOLIS-HONEYWELL REGULATOR COMPANY
FREEPORT, ILLINOIS
FED. MFR. CODE 91929

# SWITCH – BASIC

CATALOG LISTING
**MT-4RV22**

S

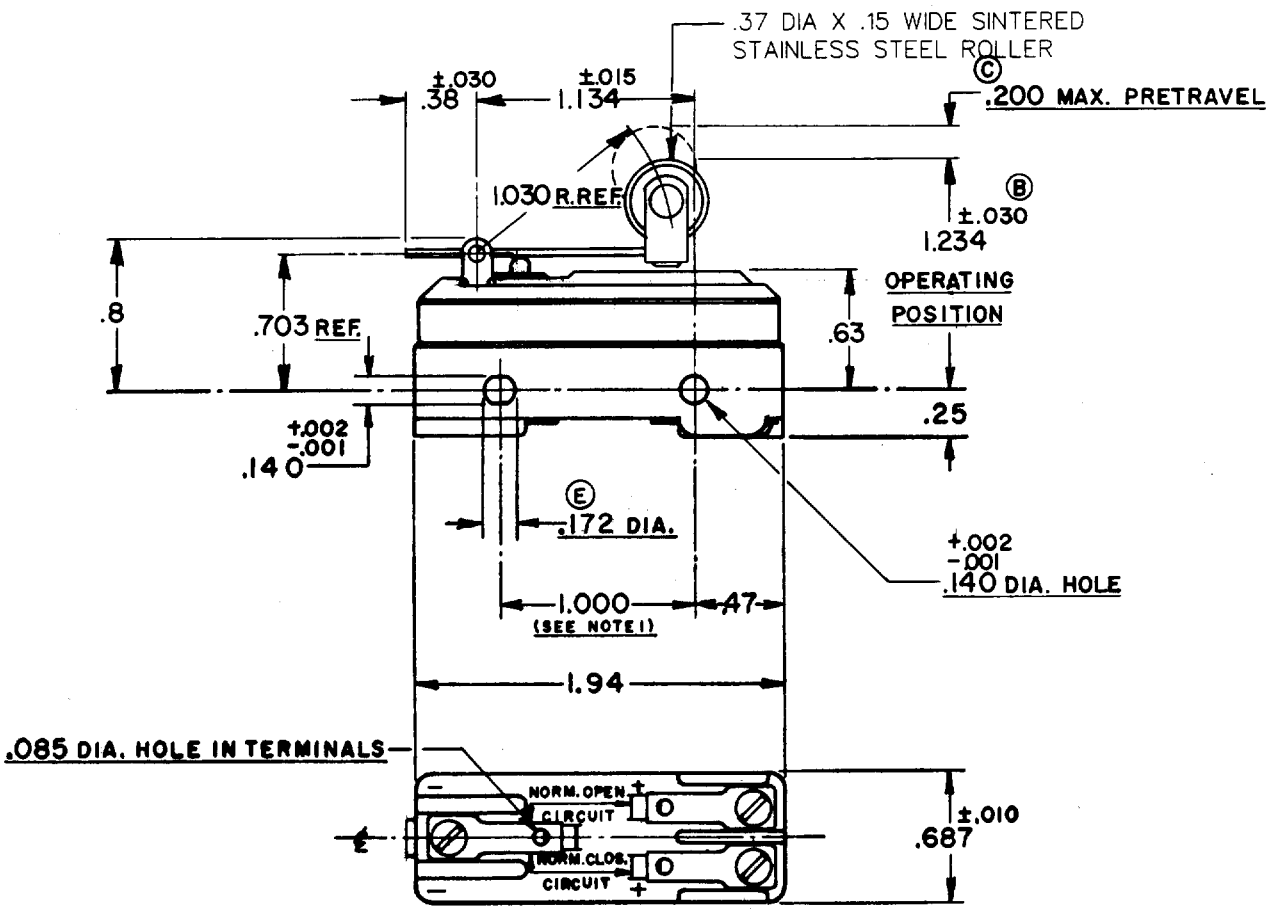


NOTE-
1- MOUNTING HOLES WILL ACCEPT PINS OR SCREWS OF .139 MAX. DIA. ON 1.000 ±.002 CENTERS.
2- FOR BEST RESULTS EITHER POLARIZE THE SWITCH WITH COMMON TERMINAL BEING OF NEGATIVE POLARITY OR MOUNT THE SWITCH WITH BRASS SCREWS AND SPACE AT LEAST .250 FROM MAGNETIC MATERIALS.

THIS DRAWING COVERS A PROPRIETARY ITEM AND IS THE PROPERTY OF MICRO SWITCH, A DIVISION OF HONEYWELL. THIS DRAWING IS NOT TO BE COPIED OR USED WITHOUT THE APPROVAL OF MICRO SWITCH.

## CHARACTERISTICS

OPERATING FORCE — — — — Ⓐ 4 1/2 OZ. MAX.
RELEASE FORCE — — — — — — — 1 OZ. MIN.
DIFFERENTIAL TRAVEL — — — Ⓐ .035 MAX.
OVERTRAVEL — — — — — — — — — — .015 MIN.
Ⓓ

## ELECTRICAL DATA

CONTACT ARRANGEMENT
S.P.D.T.

| | | | |
|---|---|---|---|
| NON-POLARIZED | VOLTS D-C 125 250 | MOTOR 1/4 HP + — | RESISTIVE 10 AMPS 1.5 TO 3.0* |
| POLARIZED OR NON-MAGNETICALLY MOUNTED | VOLTS D-C 125 250 | MOTOR 1/2 HP + — | RESISTIVE 10 AMPS 1.5 TO 3.0* |

* NOT SUITABLE FOR USE AT LESS THAN 1.5 AMPS
\+ WILL NOT BREAK LOCKED ROTOR CURRENT

UND. LAB. INC. LISTED RATING (NON-POLARIZED) – LISTED 10 A – 125 VDC OR AC; 1/4 HP – 125 VDC OR AC

SCALE FULL
DO NOT SCALE PRINT

UNLESS OTHERWISE SPECIFIED
DIMENSIONS ARE IN INCHES
**TOLERANCES ARE:**

| | | |
|---|---|---|
| ONE PLACE | (.0) | ±.030 |
| TWO PLACE | (.00) | ±.015 |
| THREE PLACE | (.000) | ±.005 |
| ANGLES | | ± |

WEIGHT

(M) MT-4RV22 ISSUE 4
REPLACES
MT-4RV22
RELEASE NO.
M
DRAWING NUMBER
ISSUE 12

| REVISIONS | | | |
|---|---|---|---|
| A | C.O. 9799 C.M.A. 11 AUG. 55 | CHECK | 55 |
| B | CORR. C.M.A. 25 AUG. 55 | | 19 Aug 55 |
| C | C.O. 11613 N.H.L. 1 AUG. '57 | | H. U. |
| D | C012369 K.L.B. 11 DEC. 57 | CHECK | H. U. |
| E | C013960 MBF 23 OCT 59 | | |
| F | C035255 D B W 12 MAY 75 | | 55 |
| G | C046819 WJM 26 NOV 79 | | 19 Aug 55 |
| H | CO-75204-B S A V 1 FEB 94 | | G.C.H. |

CHECK G.C.H.
DRAWN C.M.A. 11 AUG. 55
74-96