Honeywell

LIMIT SWITCH

CATALOGUE LISTING: EVN

CHART NO.: MTG-EV-314

LISTING NOMENCLATURE:- **EVN 2000** [ ]

MTG-EV-314

REPLACES

DRAWING NUMBER: DR#618

RELEASE NUMBER

ISSUE: 1

REVISIONS

MODIFY ON CAD3D SYSTEM ONLY

A

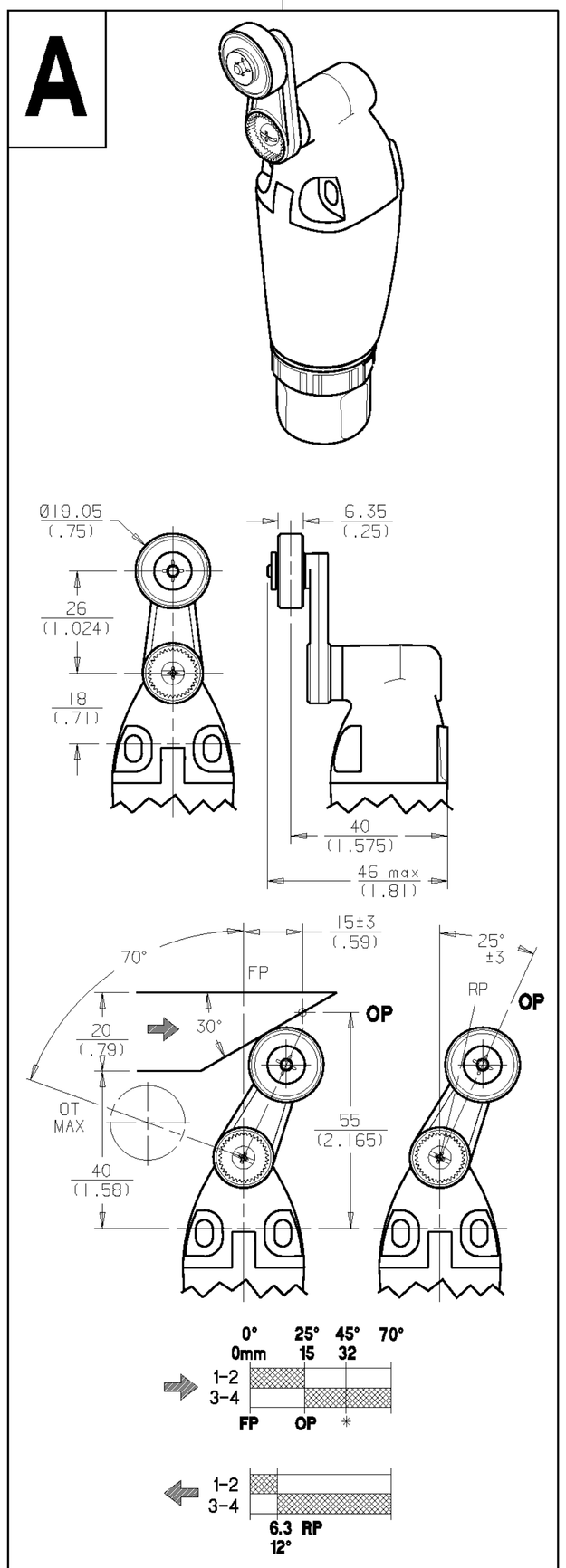

110 Nmm (1.0 lbf.in)

200 Nmm (1.8 lbf.in)

B

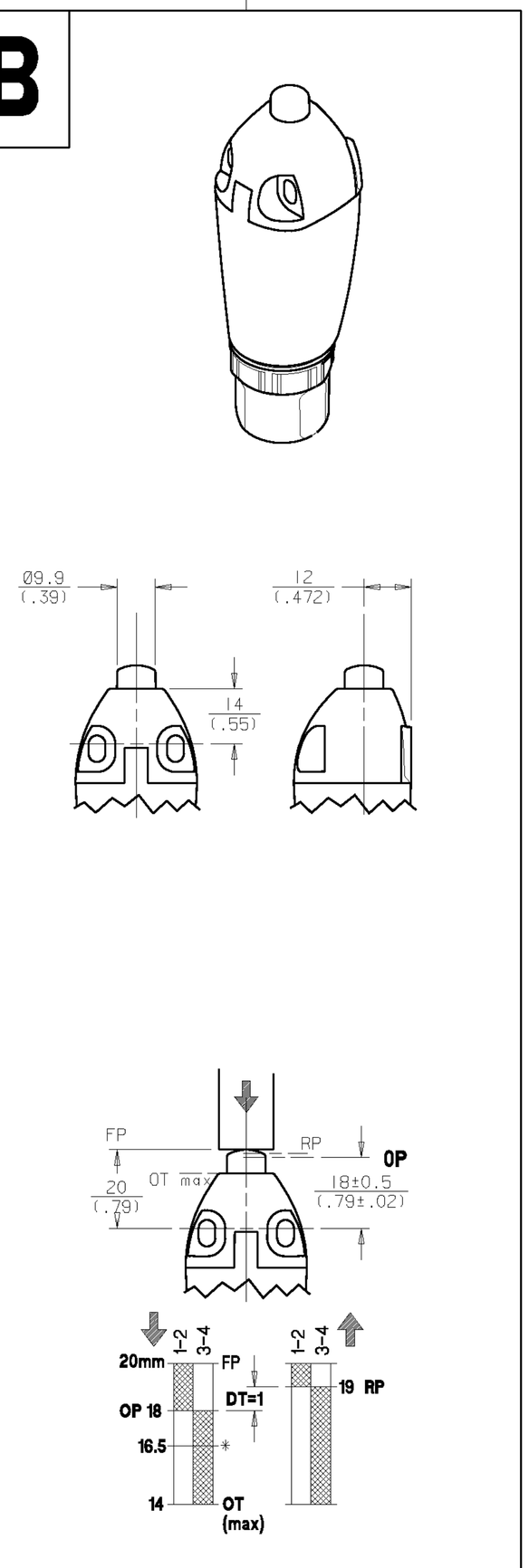

14 N (3.1 lbf)

34 N (7.7 lbf)

C

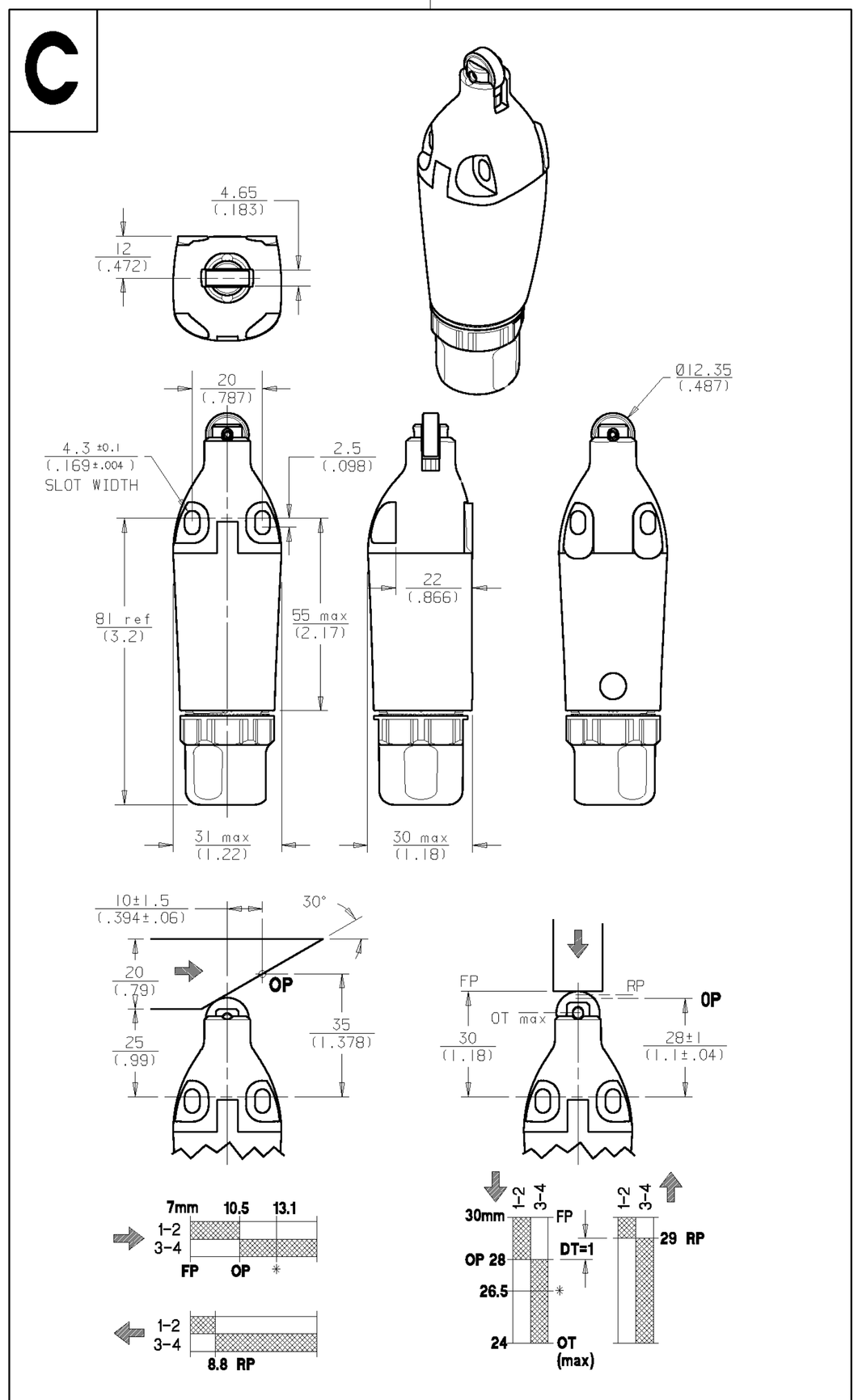

8 N (1.8 lbf)

14 N (3.1 lbf)

20 N (4.4 lbf)

34 N (7.7 lbf)

D

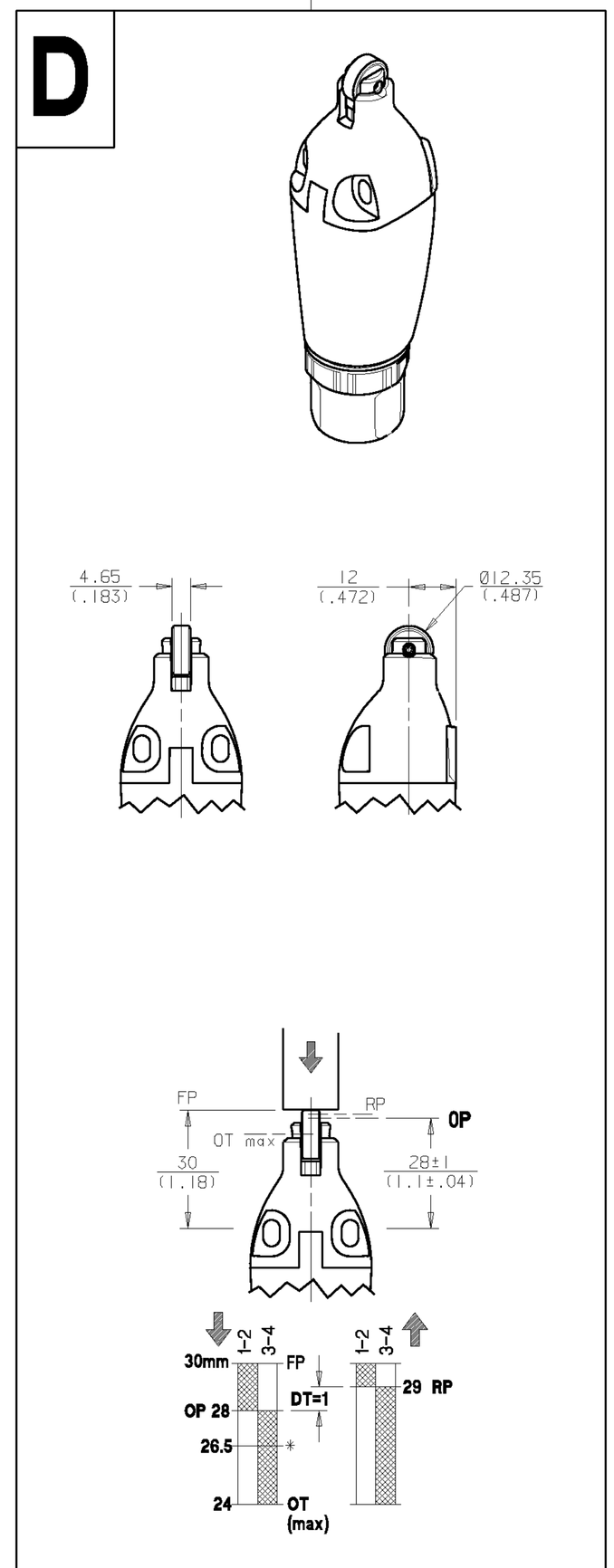

14 N (3.1 lbf)

34 N (7.7 lbf)

* POSITIVE OPENING IEC 947-5- ANNEX K

NOMINAL TRAVELS AND RELATED TERMINALS

CONTACT CLOSED

CONTACT OPEN

NORMAL OPERATING FORCE/TORQUE MAX

MAXIMUM DISCONNECT FORCE/TORQUE

ELECTRICAL RATING

SILVER CONTACTS				GOLD PLATED CONTACTS
AC		DC		NOT CURRENTLY AVAILABLE
A300 AC15 Ue Ie		Q300 DC13 Ue Ie		
VOLTS	AMPS	VOLTS	AMPS	
120	6	125	0.55	
240	3	250	0.27	

I_{th}=10A U_i=320V U_{imp}=2500V

SCPD: 10A QUICK ACTING FUSE (IEC269.1gG-TYPE)

ENDURANCE

MECHANICAL: 10 MILLION OPERATIONS

ELECTRICAL: 100,000 OPERATIONS

ENVIRONMENTAL

IP66/67 (EN60529) NEMA 1, 12, 13

TEMP RANGE: -25°C TO 85°C
-13°F TO 185°F

STORAGE: -40°C TO 85°C
-40°F TO 185°F

SHOCK: 50G (IEC 68-2-27)
VIBRATION: 10G (IEC 68-2-6)
BUMP: 40G (IEC 68-2-29)

MARKING/APPROVALS

CE

EN50047
IEC 947-5-1
(EN60947pt5-1)
EN81-1

THE COPYRIGHT OF THIS DRAWING IS THE PROPERTY OF HONEYWELL LTD. THE DRAWING IS SUPPLIED IN CONFIDENCE AND MUST NOT BE USED FOR ANY PURPOSE OTHER THAN THAT FOR WHICH IT IS SUPPLIED.

THIRD ANGLE PROJECTION

SCALE 1:1

DIMENSIONS ARE IN MM/(INCHES).

NOTES:-

1. BLACK GLASS FILLED POLYESTER HOUSING & COVER.
2. ENCLOSURE DOUBLE INSULATED TO IEC 539 CLASS II.
3. MINIMUM OPERATING VELOCITY (Vmin) = 1.0 MM/S (THESE LIMITS APPLY TO CAM OPERATION AS SHOWN IN THE ABOVE DIAGRAMS ONLY)
   MAXIMUM OPERATING VELOCITY (Vmax) = 2.0 M/S
   MAXIMUM OPERATING FREQUENCY (Fmax) = 100 OPS/MIN
4. FREE POSITION (FP), OPERATING POINT (OP), OVERTRAVEL (OT) AND PRETRAVEL (PT) AL TO EN50047.

5 MAXIMUM TIGHTENING TORQUE FOR FIXING SCREW = 0.5Nm (4.4in.LB)

CONTACT BLOCK DIAGRAM

SNAP-ACTION CONTACTS TYPE Z6 (4MM AIR GAP)

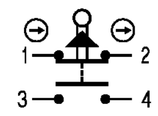

DRAWN	J. BOYD	5/01
CHECK		
DESIGN		
AUTHOR'N		