Honeywell

LIMIT SWITCH

CATALOGUE LISTING
GLS

CHART NO.
MTG-GL-181

FIG. 1

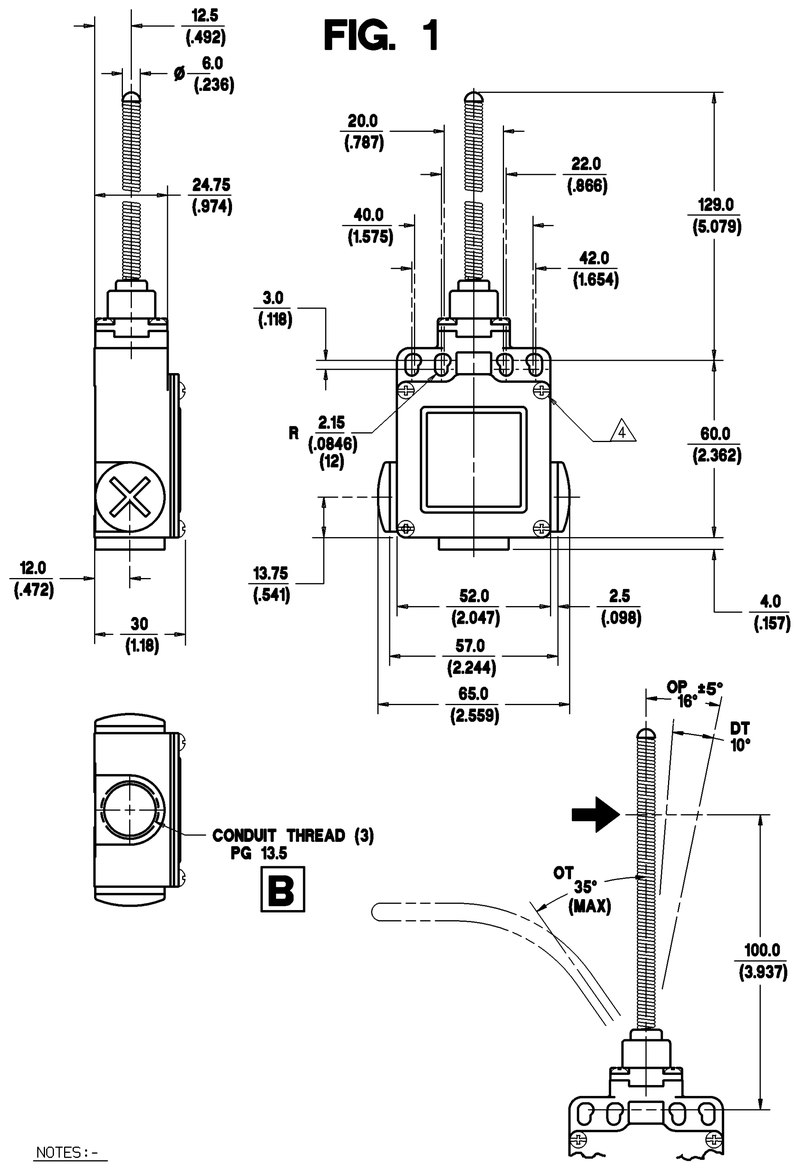

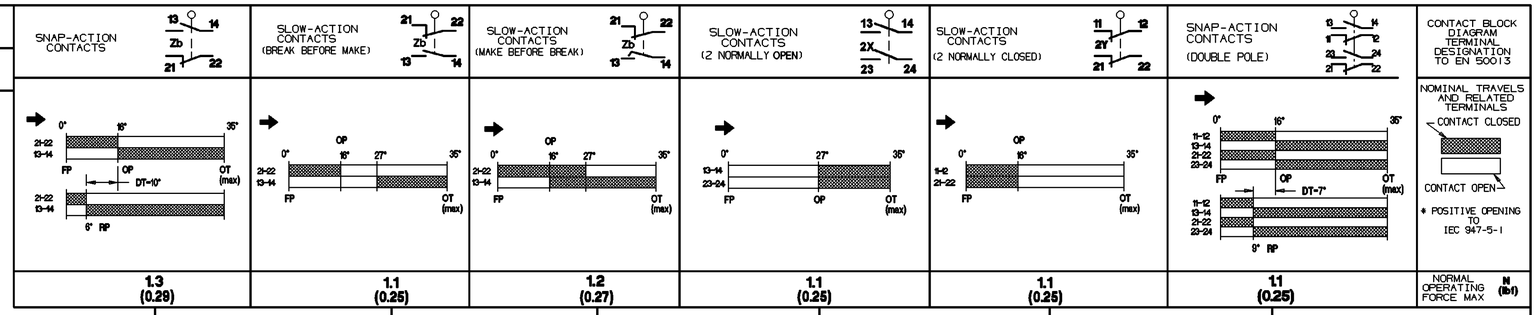

01 OR 07 — 03 OR 33 — 04 OR 34 — 05 OR 35 — 06 OR 36 — 24 OR 32

24 — BASIC SWITCH WITH SILVER CONTACTS

32 — BASIC SWITCH WITH GOLD PLATED CONTACTS

BASIC SWITCH

CONDUIT THREAD (SEE FIGS. 1 & 2)

WOBBLE ACTUATOR (SEE FIG. 1)

EN50047 BODY TYPE (SEE FIG. 1) — **GLE** X XX E7B – XXXX — MODIFICATION CODE

1/2" NPT X 14 CONDUIT THREAD ADAPTER — A 01

PG 13.5 CONDUIT THREAD — B 03

M20 X 1.5 CONDUIT THREAD — C 04

PF 1/2 CONDUIT THREAD — D 05

06 07 33 34 35 36

C021 — CABLE 5 WIRE, WITH GROUND. LAST CHARACTER IS CABLE LENGTH 1 = 1MTR. CABLE LENGTHS ARE FROM 1 TO 9 METRES. ONLY AVAILABLE WITH CONDUIT THREAD TYPE 'B'.

Q01 — CONNECTOR, 4 PIN MICRO. ONLY AVAILABLE WITH CONDUIT THREAD TYPE 'B'.

Q02 — CONNECTOR, 5 PIN MICRO TWIN KEYWAY. ONLY AVAILABLE WITH CONDUIT THREAD TYPE 'B'.

Q03 — CONNECTOR, 4 PIN MINI. ONLY AVAILABLE WITH CONDUIT THREAD TYPE 'B'.

Q04 — CONNECTOR, 5 PIN MINI. ONLY AVAILABLE WITH CONDUIT THREAD TYPE 'B'.

Q07 — CONNECTOR, 5 PIN MICRO. ONLY AVAILABLE WITH CONDUIT THREAD TYPE 'B'.

NOTE:-
ANY STANDARD LISTING WITH SUFFIX 'RS' OR 'FE' IS PERMITTED.

NOTE:
FOR CONNECTION DIAGRAMS AND ADDITIONAL ELECTRICAL, ENVIRONMENTAL & DIMENSIONAL INFORMATION SEE DRAWING GL-49212.

NOTE:- CABLE AND CONNECTOR WILL BE FITTED TO BOTTOM EXIT CONDUIT ONLY. OTHER OPTIONS CUSTOMER SPECIAL 'N' LISTING.

FIG. 2

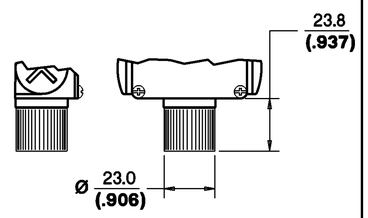

1/2" NPT X 14 CONDUIT THREAD ADAPTER **A**

NOTES:-

1. ZINC DIECAST BODY AND HEAD WITH STEEL COVER. BODY AND COVER FINISHED IN MICRO SWITCH BLUE EPOXY PAINT. HEAD FINISHED IN BLACK EPOXY PAINT.
2. MINIMUM OPERATING VELOCITY (Vmin) = 0.13 rad/s
   MAXIMUM OPERATING VELOCITY (Vmax) = 13 rad/s
   MAXIMUM OPERATING FREQUENCY (Fmax) = 100 OPS/MIN
3. FREE POSITION (FP), OPERATING POINT (OP), OVERTRAVEL (OT) AND PRETRAVEL (PT) ALL TO EN50047.

4 MAXIMUM TIGHTENING TORQUE FOR FIXING SCREW = 0.5Nm (4.4in.LB)

STANDARD SILVER CONTACTS		GOLD PLATED CONTACTS	ENVIRONMENTAL	APPROVALS
ELECTRICAL RATING		ELECTRICAL RATING		
AC	DC			
A300 AC15 Ue Ie	Q300 DC13 Ue Ie	I_{th} = 10A	IP66 NEMA 1,4,12,13	UL, CSA
VOLTS AMPS	VOLTS AMPS	1V 10µA MIN.	TEMP RANGE : -25°C TO 85°C, -13°F TO 185°F	
120 6	125 0.55	50V 100mA MAX.	STORAGE : -40°C TO 85°C, -40°F TO 185°F	
240 3	250 0.27		SHOCK : 50G PER IEC 68-2-27	IEC 947-5-1
			VIBRATION : 10G PER IEC 68-2-6	EN50047

THE COPYRIGHT OF THIS DRAWING IS THE PROPERTY OF HONEYWELL LTD. THE DRAWING IS SUPPLIED IN CONFIDENCE AND MUST NOT BE USED FOR ANY PURPOSE OTHER THAN THAT FOR WHICH IT IS SUPPLIED.

THIRD ANGLE PROJECTION | SCALE 1:1 | DIMENSIONS ARE IN MM/INCHES. | RASTER

MTG-GL-181

REPLACES A018-38

DRAWING NUMBER A018-276

ISSUE 10 | RELEASE NUMBER 11

REVISIONS

6	9/96
A018-276	
7	12/96
A018-293	
8	07/97
CO-000083	
9	CO/395
IW 6/98	
10	0037216 BS 07FEB08
11	0074058 DJS 04FEB11

DRAWN	M. LOCH	3/92
CHECK	I. WEIR	3/92
DESIGN	J. BOYD	3/92
AUTHOR'N	P. TRICKETT	3/92