Honeywell

GLOBAL SAFETY SWITCH

CATALOGUE LISTING CHART NO.

MTG-GS-252

DO NOT SCALE PRINT

MTG-GS-252

REPLACES (M) GS SERIES CHART 1

DRAWING NUMBER CO/542

ISSUE 4

RELEASE NUMBER

REVISIONS

2	CO/703	IW 11/98
3	0022231	BNA 31MAY06
4	0094575	SBH 09OCT12

FIGURE 1

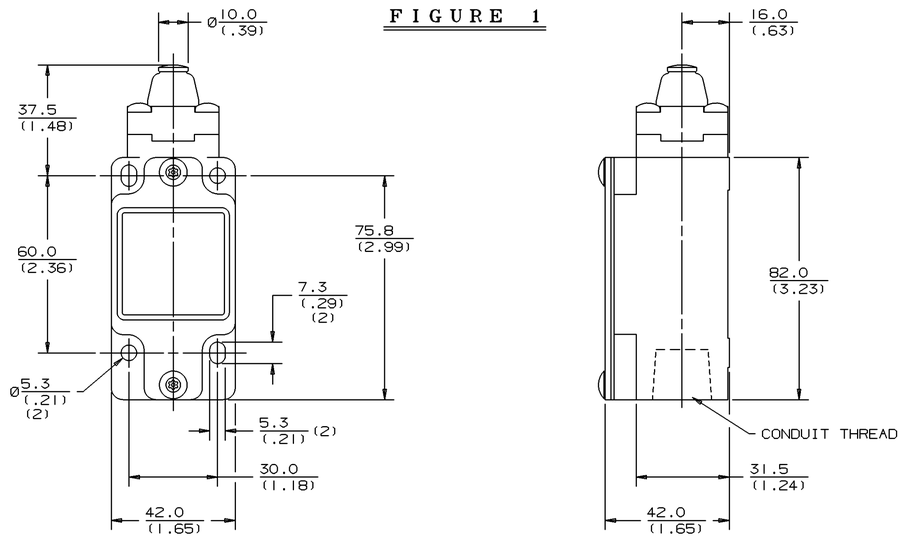

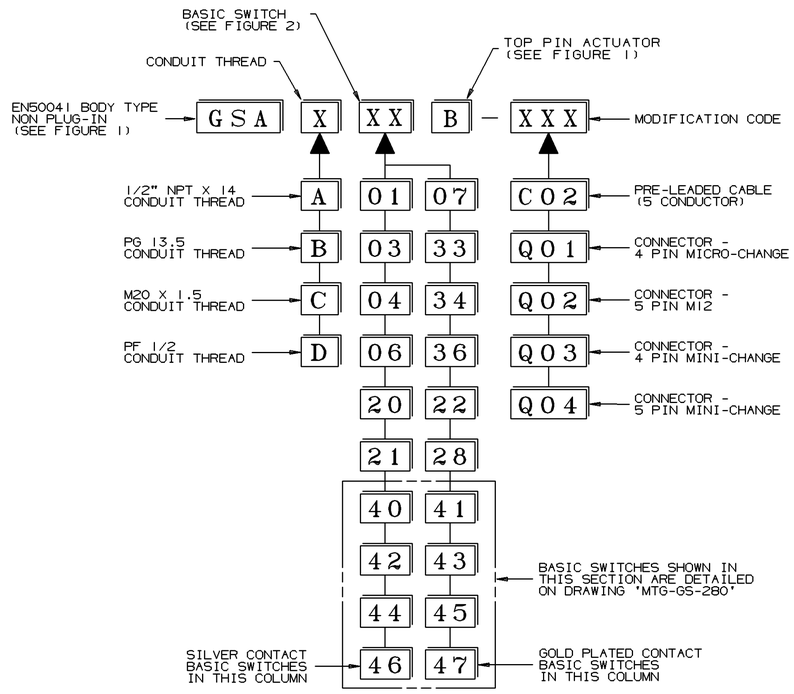

FIGURE 2

BASIC SWITCH	CONTACT BLOCK DIAGRAM	PIN ACTUATION (NOMINAL TRAVELS AND RELATED TERMINALS; ■ - CONTACT CLOSED, ▭ - CONTACT OPEN, ▨ - CONTACT CLOSED DIFFERENTIAL TRAVEL, ** POSITIVE OPENING TO IEC 947-5-1, DIMENSIONS IN mm)	MAXIMUM OPERATING FORCE N/LB	MAXIMUM DISCONNECT FORCE N/LB
01, 07	SNAP ACTION SINGLE POLE (13–14, 21–22, 1Zb)	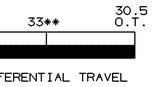	16/3.6	27/6.0
03, 33	SLOW ACTION BREAK BEFORE MAKE (21–22, 13–14, Zb)	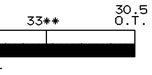	16/3.6	27/6.0
04, 34	SLOW ACTION MAKE BEFORE BREAK (21–22, 13–14, Zb)	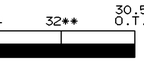	16/3.6	27/6.0
06, 36	SLOW ACTION 2 NORMALLY CLOSED (21–22, 11–12, 2Y)	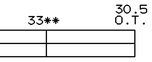	16/3.6	27/6.0
20, 22	SNAP ACTION DOUBLE POLE (13–14, 11–12, 23–24, 21–22)	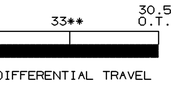	16/3.6	37/8.2
21, 28	SNAP ACTION DOUBLE POLE SEQUENTIAL (13–14, STEP 1, 11–12, 23–24, STEP 2, 21–22)	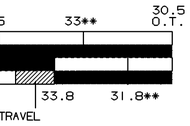	16/3.6	27/6.0

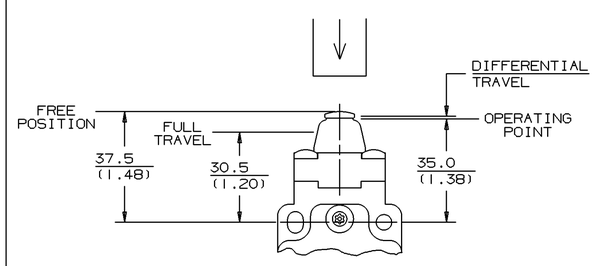

MINIMUM OPERATING VELOCITY = 1.0mm/S (0.04in/S)
MAXIMUM OPERATING VELOCITY = 0.1M/S (3.9in/S)
MAXIMUM OPERATING FREQUENCY = 250 OPS/MINUTE

IEC 947-5-1 ELECTRICAL RATING	GOLD PLATED CONTACTS	ENVIRONMENTAL	APPROVALS
SILVER CONTACTS	I_{th} = 10A	IP67 NEMA/UL 1,4,12,13	UL, CSA
1V 10µA MIN.		TEMP RANGE : -25°C TO 85°C / -13°F TO 185°F	
50V 100mA MAX.		STORAGE : -40°C TO 85°C / -40°F TO 185°F	
		SHOCK : 50G PER IEC 68-2-27	IEC 947-5-1
		VIBRATION : 10G PER IEC 68-2-6	EN50041

AC		AC (FOR 2NC)		DC	
A600 Ue	AC15 Ie	A300 Ue	AC15 Ie	Q300 Ue	DC13 Ie
VOLTS	AMPS	VOLTS	AMPS	VOLTS	AMPS
120	6	120	6	24	2.8
240	3	240	3	125	0.55
380	1.9			250	0.27
480	1.5				
500	1.4				
600	1.2				

NOTES:-

1. RED EPOXY PAINT FINISHED ZINC DIE-CAST BODY AND STEEL COVER. BLACK EPOXY PAINT FINISHED ZINC DIE-CAST HEAD.
2. FREE POSITION (F.P.), OPERATING POINT, OVERTRAVEL (O.T.) AND PRETRAVEL ALL TO EN50041.
3. ANY STANDARD LISTING WITH SUFFIX 'RS' OR 'FE' IS PERMITTED.
4. FOR CONNECTION DIAGRAMS AND ADDITIONAL ELECTRICAL, DIMENSIONAL AND ENVIRONMENTAL INFORMATION REFER TO DRAWING GL-49212.
5. HEAD AND COVER FIXED WITH TORX® SOCKET HEAD SCREWS (DRIVER SUPPLIED).

NO CHANGES CAN BE MADE TO THIS DRAWING WITHOUT JOINT NEWHOUSE/FREEPORT APPROVAL

THE COPYRIGHT OF THIS DRAWING IS THE PROPERTY OF HONEYWELL LTD. THE DRAWING IS SUPPLIED IN CONFIDENCE AND MUST NOT BE USED FOR ANY PURPOSE OTHER THAN THAT FOR WHICH IT IS SUPPLIED.

THIRD ANGLE PROJECTION | SCALE:- 1/1 | DIMENSIONS ARE IN MM (INCHES) | MODIFY ON CAD SYSTEM ONLY

DRAWN I. WEIR 7/98 | CHECK | DESIGN | AUTHOR'N