Honeywell

GLOBAL SAFETY SWITCH

CATALOGUE LISTING CHART NO.

MTG-GS-262

DO NOT SCALE PRINT

MTG-GS-262

REPLACES

DRAWING NUMBER DR/202

ISSUE 1

RELEASE NUMBER

REVISIONS

FIGURE 1

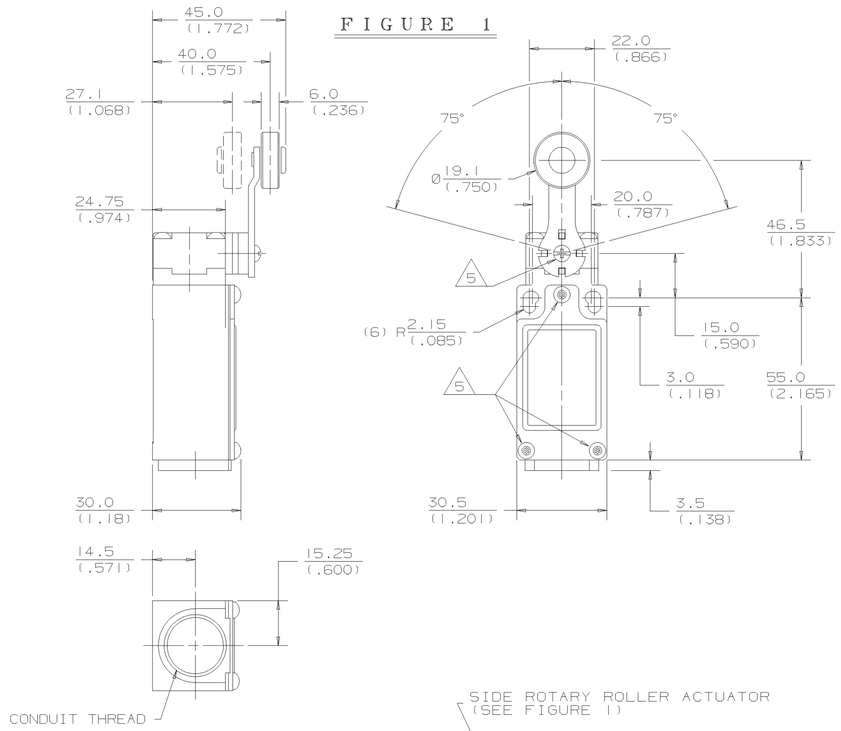

FIGURE 3

BASIC SWITCH	CONTACT BLOCK DIAGRAM	OPERATING TORQUE MAX Nmm / in.lbs	DISCONNECT TORQUE MAX Nmm / in.lbs
01, 07	SNAP ACTION SINGLE POLE (13, 14, 21, 22, 1Zb)	120 / 1.1	140 / 1.3
03, 33	SLOW ACTION BREAK BEFORE MAKE (21, 22, 13, 14, Zb)	110 / 1.0	160 / 1.5
04, 34	SLOW ACTION MAKE BEFORE BREAK (21, 22, 13, 14, Zb)	110 / 1.0	170 / 1.6
06, 36	SLOW ACTION 2 NORMALLY CLOSED (21, 22, 11, 12, 2Y)	110 / 1.0	150 / 1.4

CAM ACTUATION PER EN50047

NOMINAL TRAVELS AND RELATED TERMINALS
- CONTACT CLOSED — CONTACT OPEN — CONTACT CLOSED
DIFFERENTIAL TRAVEL, ** POSITIVE OPENING TO IEC 947-5-1
DIMENSIONS IN mm

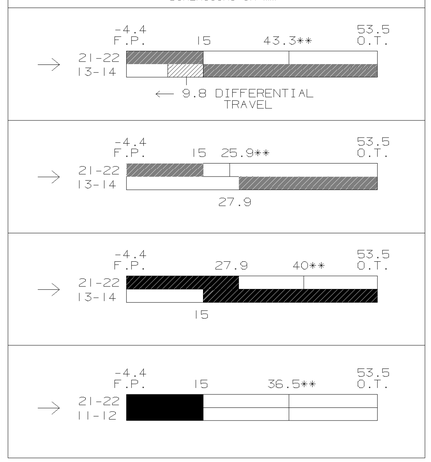

ANGULAR ACTUATION

NOMINAL TRAVELS AND RELATED TERMINALS
- CONTACT CLOSED — CONTACT OPEN — CONTACT CLOSED
DIFFERENTIAL TRAVEL, ** POSITIVE OPENING TO IEC 947-5-1

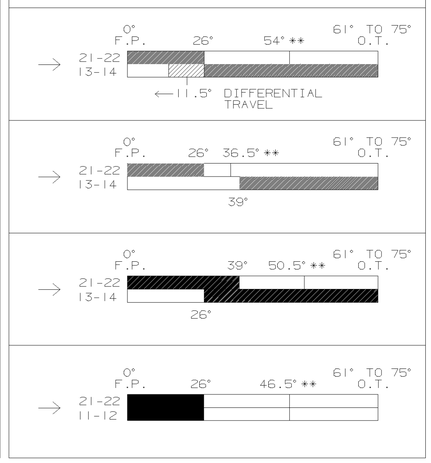

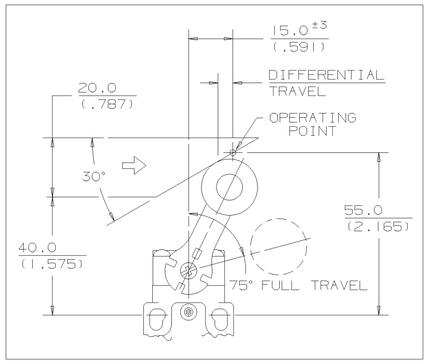

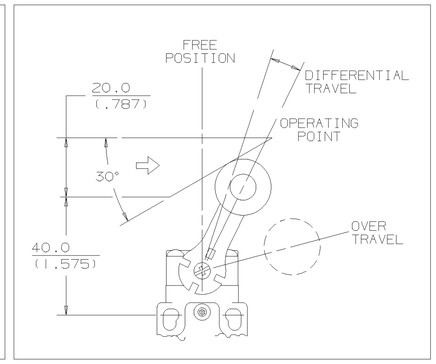

MIN. OPERATING VELOCITY : 2.0mm/S (.08in/S)
MAX. OPERATING VELOCITY : 200mm/S (7.9in/S)
MAX. OPERATING FREQUENCY : 250 OPS/MINUTE

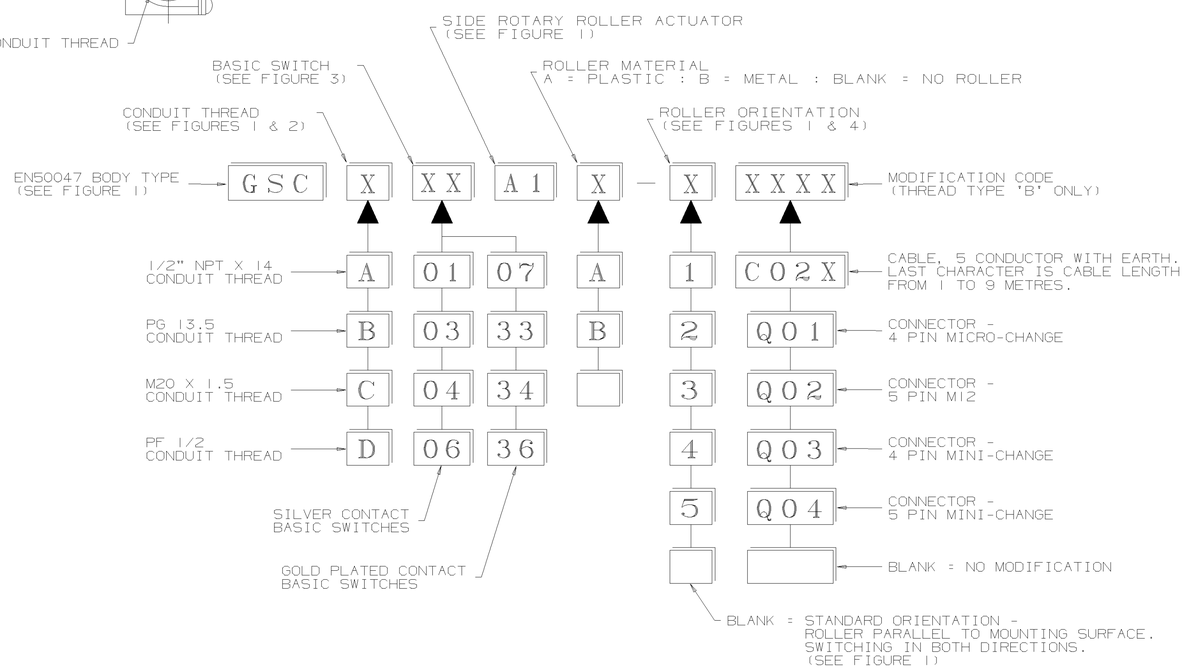

NOTES:-

1. RED EPOXY PAINT FINISHED ZINC DIE-CAST BODY AND STEEL COVER. BLACK EPOXY PAINT FINISHED ZINC DIE-CAST HEAD.
2. FREE POSITION (F.P.), OPERATING POINT, OVERTRAVEL (O.T.) AND PRETRAVEL ALL TO EN50047.
3. ANY STANDARD LISTING WITH SUFFIX 'RS' OR 'FE' IS PERMITTED.
4. FOR CONNECTION DIAGRAMS AND ADDITIONAL ELECTRICAL, DIMENSIONAL AND ENVIRONMENTAL INFORMATION REFER TO DRAWING GL-49212.
5. MAXIMUM TIGHTENING TORQUE FOR FIXING SCREWS = 0.5 Nm (4.4 in lb).
6. HEAD AND COVER FIXED WITH TORX® SOCKET HEAD SCREWS (DRIVER SUPPLIED).
7. LEVERS MAY BE ATTACHED AND KEYED TO THE SHAFT AT 10° INCREMENTS.

FIGURE 2

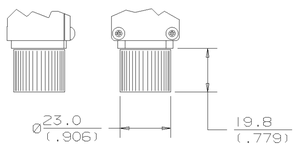

1/2" NPT X 14 CONDUIT THREAD ADAPTER

A

FIGURE 4

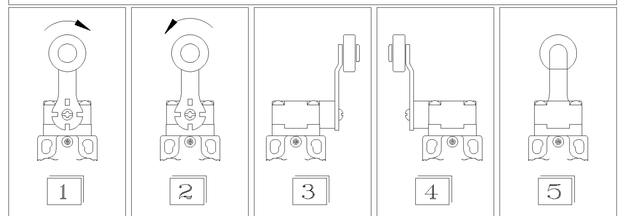

1	2	3	4	5
SWITCHING CLOCKWISE ROTATION ONLY	SWITCHING ANTI-CLOCKWISE ROTATION ONLY	LEVER ON RIGHT	LEVER ON LEFT	LEVER TO MOUNTING SURFACE

ELECTRICAL RATING					ENVIRONMENTAL	APPROVALS
SILVER CONTACTS				GOLD PLATED CONTACTS		
AC		DC			IP66 NEMA 1,4,12,13	UL, CSA
A300 Ue	AC15 Ie	Q300 Ue	DC13 Ie	I_{th} = 10A	TEMP RANGE : -25°C TO 85°C / -13°F TO 185°F	
VOLTS	AMPS	VOLTS	AMPS	1V 10μA MIN.	STORAGE : -40°C TO 85°C / -40°F TO 185°F	
120	6	125	0.55		SHOCK : 50G PER IEC 68-2-27	IEC 947-5-1
240	3	250	0.27	50V 100mA MAX.	VIBRATION : 10G PER IEC 68-2-6	EN50047

NO CHANGES CAN BE MADE TO THIS DRAWING WITHOUT JOINT NEWHOUSE/FREEPORT APPROVAL

DRAWN	I. WEIR	12/98
CHECK		
DESIGN		
AUTHOR'N		

THE COPYRIGHT OF THIS DRAWING IS THE PROPERTY OF HONEYWELL LTD. THE DRAWING IS SUPPLIED IN CONFIDENCE AND MUST NOT BE USED FOR ANY PURPOSE OTHER THAN THAT FOR WHICH IT IS SUPPLIED.

THIRD ANGLE PROJECTION | SCALE:- 1/1 | DIMENSIONS ARE IN MM (INCHES) | MODIFY ON CAD SYSTEM ONLY