Honeywell

GLOBAL SAFETY SWITCH

CATALOGUE LISTING CHART NO.

MTG-GS-264

DO NOT SCALE PRINT

MTG-GS-264

REPLACES

DRAWING NUMBER DR/202

ISSUE 1

RELEASE NUMBER

REVISIONS

FIGURE 1

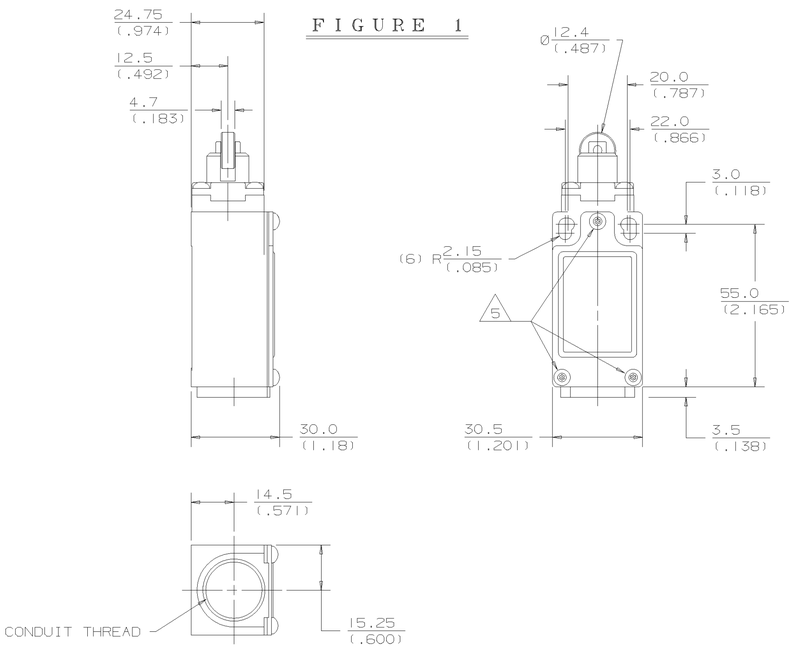

FIGURE 3

BASIC SWITCH	CONTACT BLOCK DIAGRAM	OPERATING FORCE MAX N/LB	DISCONNECT FORCE MAX N/LB
01, 07	SNAP ACTION SINGLE POLE (13, 14, 1Zb, 21, 22)	16/3.6	23/5.2
03, 33	SLOW ACTION BREAK BEFORE MAKE (21, 22, Zb, 13, 14)	14/3.2	24/5.4
04, 34	SLOW ACTION MAKE BEFORE BREAK (21, 22, Zb, 13, 14)	16/3.6	27/6.1
06, 36	SLOW ACTION 2 NORMALLY CLOSED (21, 22, 2Y, 11, 12)	13/2.9	23/5.2

CAM ACTUATION PER EN50047

NOMINAL TRAVELS AND RELATED TERMINALS
- CONTACT CLOSED — CONTACT OPEN — CONTACT CLOSED
DIFFERENTIAL TRAVEL, ** POSITIVE OPENING TO IEC 947-5-1
DIMENSIONS IN mm

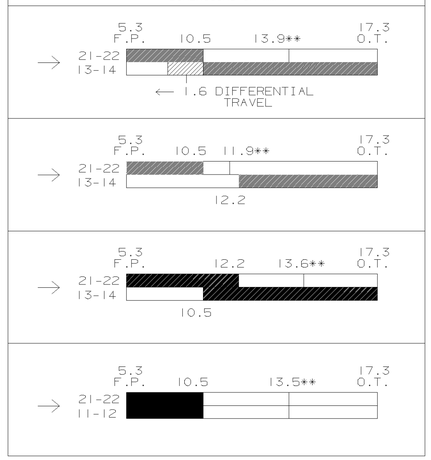

PIN ACTUATION

NOMINAL TRAVELS AND RELATED TERMINALS
- CONTACT CLOSED — CONTACT OPEN — CONTACT CLOSED
DIFFERENTIAL TRAVEL, ** POSITIVE OPENING TO IEC 947-5-1
DIMENSIONS IN mm

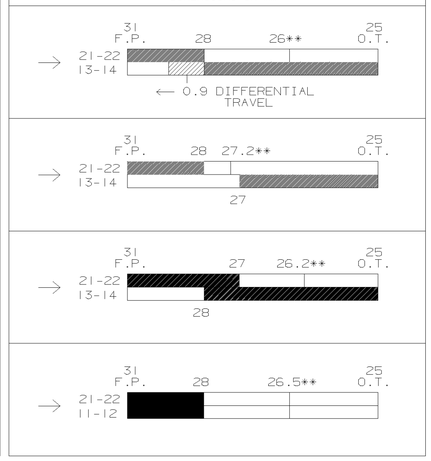

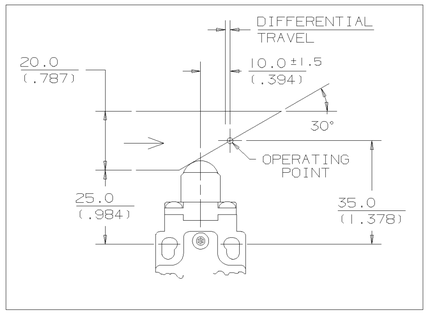

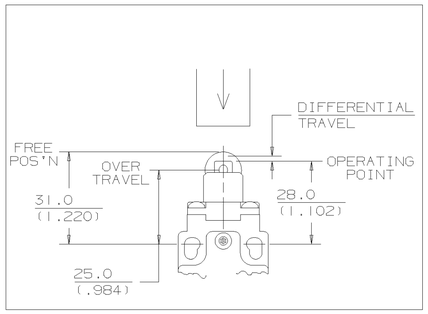

MIN. OPERATING VELOCITY : 1.0mm/S (.04in/S)
MAX. OPERATING VELOCITY : 100mm/S (3.9in/S)
MAX. OPERATING FREQUENCY : 250 OPS/MINUTE

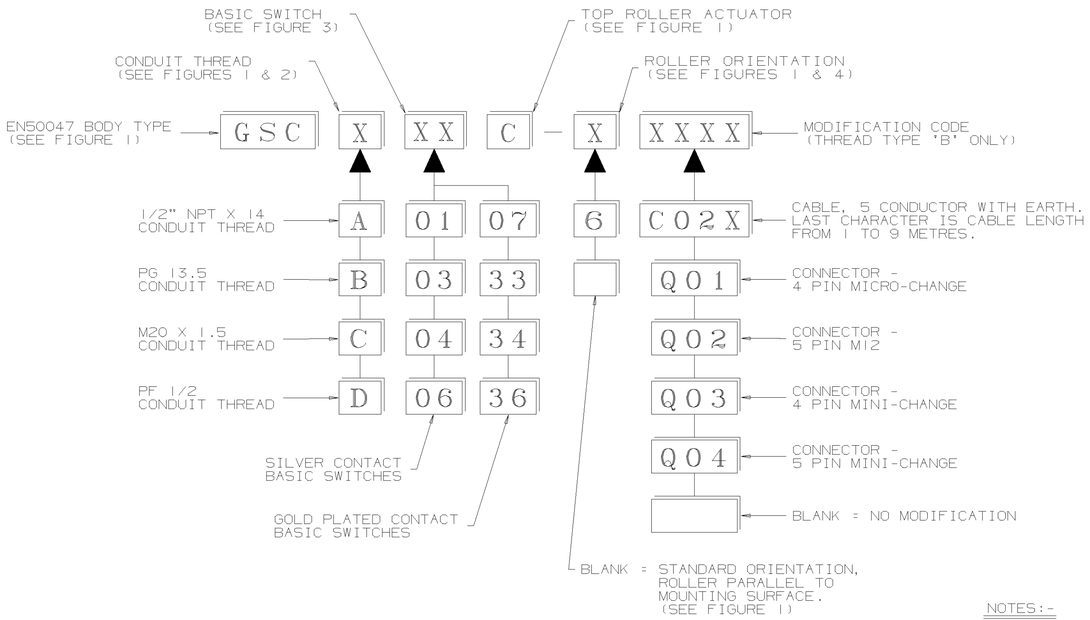

FIGURE 4

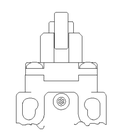

HEAD ORIENTATION WITH ROLLER PERPENDICULAR TO MOUNTING SURFACE

6

FIGURE 2

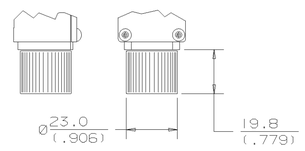

1/2" NPT X 14 CONDUIT THREAD ADAPTER

A

NOTES:-

1. RED EPOXY PAINT FINISHED ZINC DIE-CAST BODY AND STEEL COVER. BLACK EPOXY PAINT FINISHED ZINC DIE-CAST HEAD.
2. FREE POSITION (F.P.), OPERATING POINT, OVERTRAVEL (O.T.) AND PRETRAVEL ALL TO EN50047.
3. ANY STANDARD LISTING WITH SUFFIX 'RS' OR 'FE' IS PERMITTED.
4. FOR CONNECTION DIAGRAMS AND ADDITIONAL ELECTRICAL, DIMENSIONAL AND ENVIRONMENTAL INFORMATION REFER TO DRAWING GL-49212.
5. MAXIMUM TIGHTENING TORQUE FOR FIXING SCREWS = 0.5 Nm (4.4 in lb).
6. HEAD AND COVER FIXED WITH TORX® SOCKET HEAD SCREWS (DRIVER SUPPLIED).

NO CHANGES CAN BE MADE TO THIS DRAWING WITHOUT JOINT NEWHOUSE/FREEPORT APPROVAL

ELECTRICAL RATING

SILVER CONTACTS				GOLD PLATED CONTACTS
AC		DC		
A300 Ue	AC15 Ie	Q300 Ue	DC13 Ie	
VOLTS	AMPS	VOLTS	AMPS	
120	6	125	0.55	I_{th} = 10A
240	3	250	0.27	1V 10μA MIN.
				50V 100mA MAX.

ENVIRONMENTAL

IP66 NEMA 1, 4, 12, 13

TEMP RANGE : -25°C TO 85°C
-13°F TO 185°F
STORAGE : -40°C TO 85°C
-40°F TO 185°F

SHOCK : 50G PER IEC 68-2-27
VIBRATION : 10G PER IEC 68-2-6

APPROVALS

UL
CSA

IEC 947-5-1
EN50047

THE COPYRIGHT OF THIS DRAWING IS THE PROPERTY OF HONEYWELL LTD. THE DRAWING IS SUPPLIED IN CONFIDENCE AND MUST NOT BE USED FOR ANY PURPOSE OTHER THAN THAT FOR WHICH IT IS SUPPLIED.

THIRD ANGLE PROJECTION

SCALE:- 1/1

DIMENSIONS ARE IN MM (INCHES)

MODIFY ON CAD SYSTEM ONLY

DRAWN	I. WEIR	12/98
CHECK		
DESIGN		
AUTHOR'N		