MICRO SWITCH
A DIVISION OF MINNEAPOLIS HONEYWELL REGULATOR COMPANY
FREEPORT, ILLINOIS
FED. MFR. CODE 91929

SWITCH-ENCLOSED

CATALOG LISTING
OPA-Q

THIS DRAWING COVERS A PROPRIETARY ITEM AND IS THE PROPERTY OF MICRO SWITCH, A DIVISION OF HONEYWELL. THIS DRAWING IS NOT TO BE COPIED OR USED WITHOUT THE APPROVAL OF MICRO SWITCH.

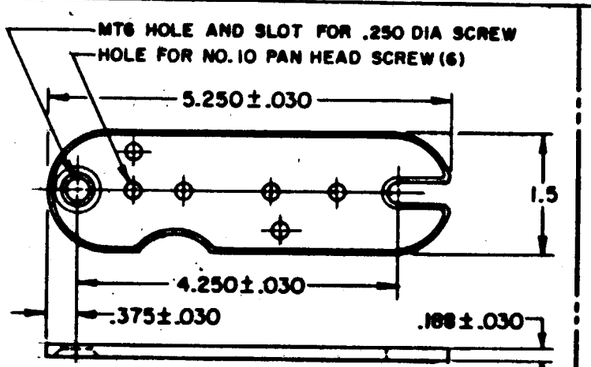

MOUNTING BRACKET (1) AND 10-32 UNF X .250 REF PAN HEAD SCREW (2) FURNISHED UNASSEMBLED
SCALE - HALF SIZE

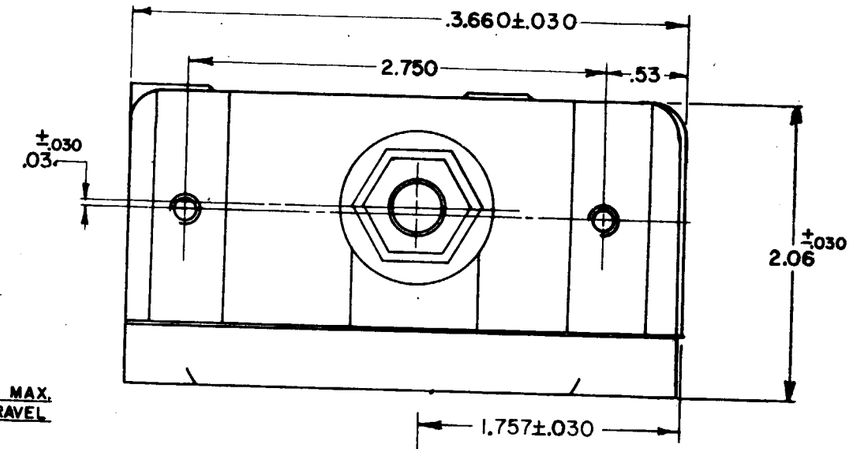

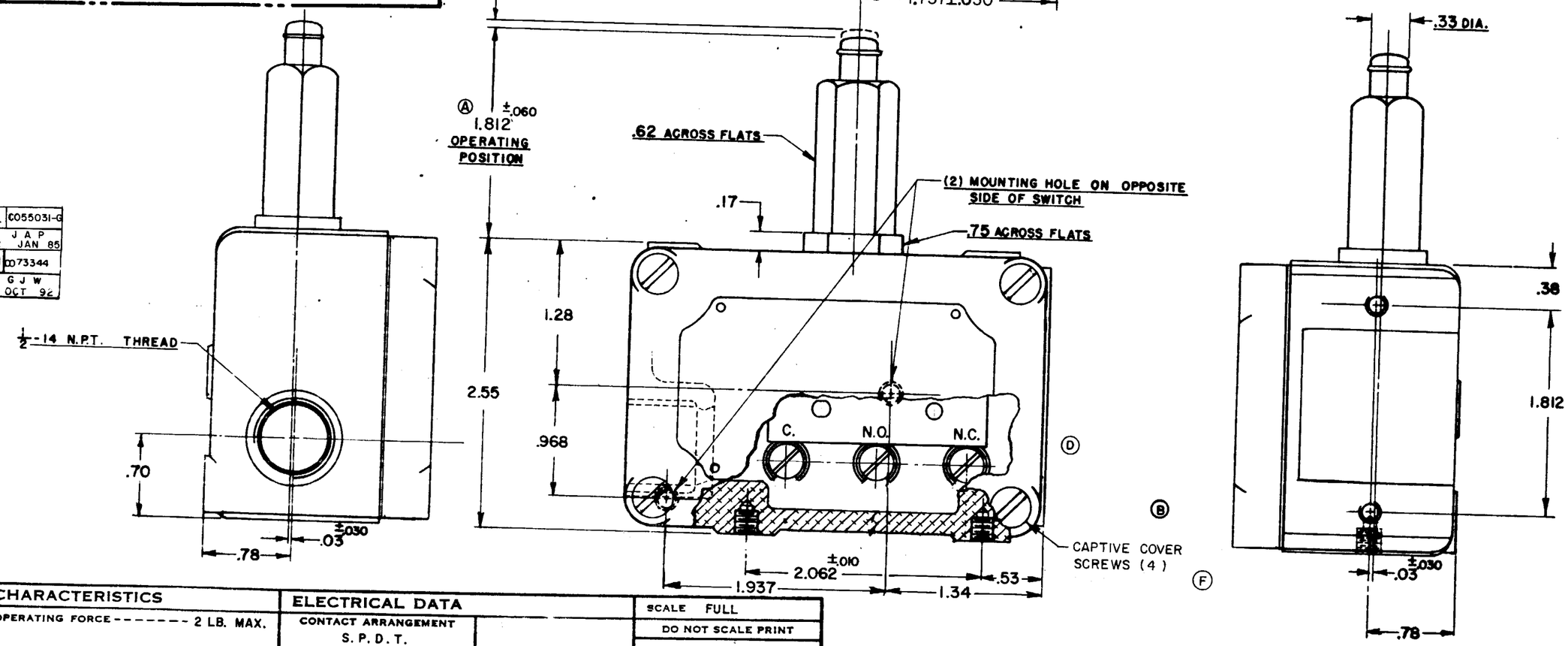

NOTE —
1-(8) MOUNTING SCREW HOLE, 10-32 NF-2B THREAD X .219 REF. DEEP.
2-8-32 NC X .219 REF. TERMINAL SCREWS AND CUPWASHERS.
3-PLUNGER ASSEMBLY IS UNSEALED

CHARACTERISTICS

OPERATING FORCE - - - - - - - 2 LB. MAX.
RELEASE FORCE - - - - - - 1/2 LB. MIN.
DIFFERENTIAL TRAVEL - - - - - - .009 MAX.
OVERTRAVEL - - - - - - - - - - .125 MIN.
BASIC SWITCH REPLACEMENT - - BA-2R-P4

ELECTRICAL DATA

CONTACT ARRANGEMENT
S. P. D. T.

-L23- 20 A-125, 250, OR 480 VAC
10 A-125 VAC "L"
1 HP-125 VAC; 2 HP-250 VAC
1/2 A-125 VDC; 1/4 A-250 VDC

SCALE FULL
DO NOT SCALE PRINT

UNLESS OTHERWISE SPECIFIED
DIMENSIONS ARE IN INCHES
TOLERANCES ARE:

ONE PLACE	(.0)	±.030
TWO PLACE	(.00)	±.015
THREE PLACE	(.000)	±.005
ANGLES		±½°

WEIGHT

OPA-Q	REPLACES		
	RELEASE NO.	SR 4663	
M	DRAWING NUMBER		
ISSUE	X	B	24
	X	B	23
	X	B	22
CHECK			

REVISIONS

A	C.O. 10162	R. L. H. 26 JAN. 56	
B	C013827	L S D 17 JULY 59	
C	C014185	K L B 4 DEC 59	
D	C016851	M B F 14 DEC 62	
E	C018276	M B F 22 JUNE 64	
F	C019878	W E G 15 APR 67	
G	C026103	D L F 21 JUL 69	
H	C028628	R E R 24 FEB 71	
J	CO 53779A	S L B 30 AUG 83	
K	CO55987	JAS 5 NOV 84	
L	C055031-G	J A P 12 JAN 85	
M	C073344	G J W 3 OCT 92	

DRAWN A.A.S. 12 AUG. 55
CHECK G.C.H. 15 AUG. 55
CHECK A.C.S. 18 AUG. 55
74-963