FO-50360-L

CW-B4783

REV	DOCUMENT	CHANGED BY	CHECK
3	202161	JAH 25JAN01	SAV

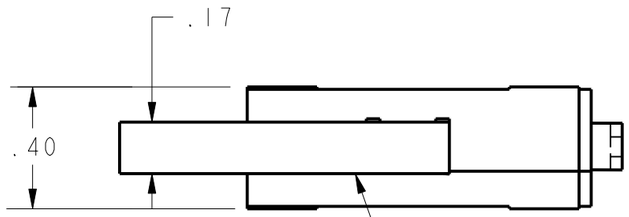

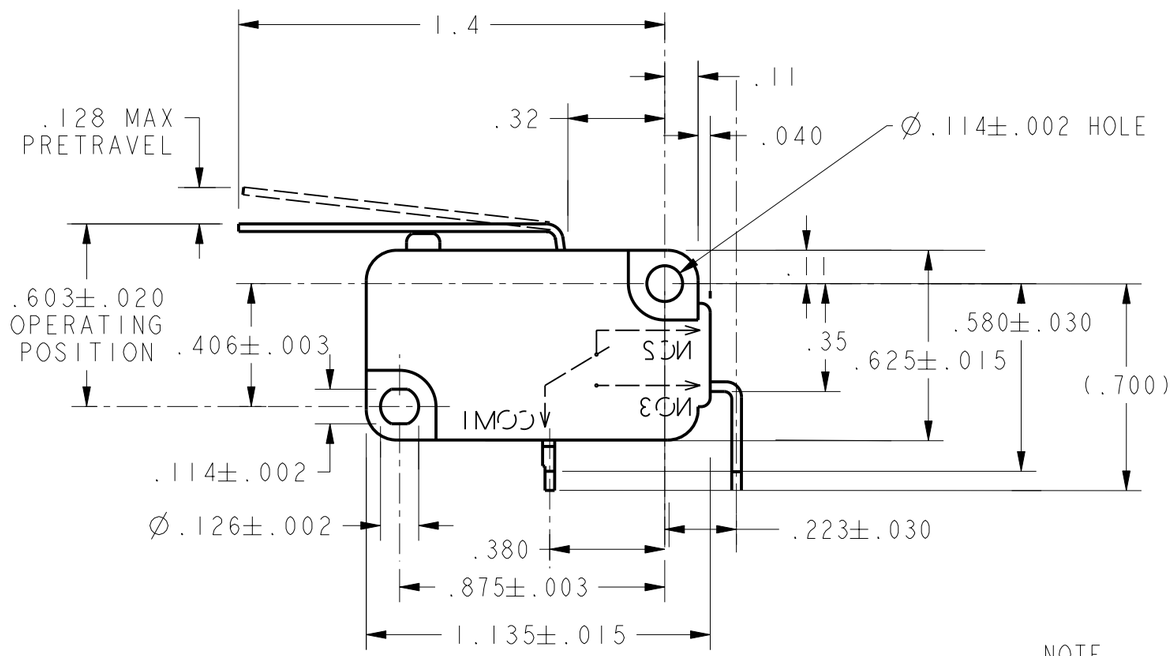

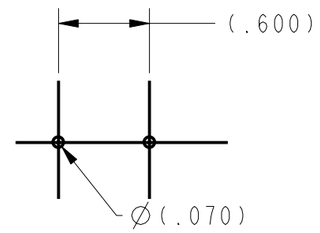

TERMINATION PATTERN

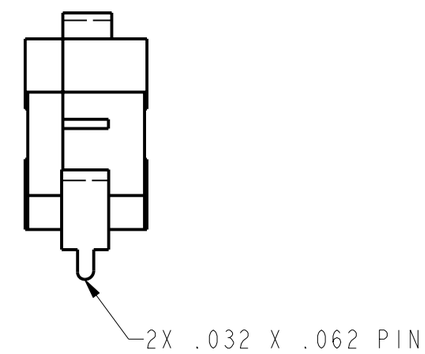

NOTE
1 - TERMINATION MAY REQUIRE STUFFING INTO BOARD

CHARACTERISTICS	
OPERATING FORCE-----	82 GRAMS MAX
RELEASE FORCE--------	8 GRAMS MIN
DIFFERENTIAL TRAVEL-------	.028 MAX
OVERTRAVEL----------	.070 MIN
RELEASE TRAVEL----------	.017 MIN

ELECTRICAL DATA

CONTACT ARRANGEMENT
S P N O

L156
11A 1/3HP 125, 250 OR 277 VAC
1/2A 125 VDC, 1/4A 250 VDC
4A 125 VAC "L"

10 (3) ~ / 250
T85 1E5 µ

UNLESS OTHERWISE SPECIFIED TOLERANCES ARE: [X] US(inch) CUSTOMARY [ ] SI(mm) METRIC

NO PLACE	X	±.040	±1
ONE PLACE	.X	±.030	±0.4
TWO PLACE	.XX	±.015	±0.15
THREE PLACE	.XXX	±.005	±
ANGLES		±	±

RAW MATERIAL-COMMERCIAL STANDARD

THIRD ANGLE PROJECTION

DRAWN	JAH	25JAN01
CHECK	SAV	25JAN01

THIS DRAWING COVERS A PROPRIETARY ITEM AND IS THE PROPERTY OF HONEYWELL SENSING AND CONTROL. THIS DRAWING IS NOT TO BE COPIED OR USED WITHOUT THE PERMISSION OF HONEYWELL.

DIMENSIONS ARE TO BE MET BEFORE PROTECTIVE COATINGS ARE APPLIED

PTC 2D | ASME Y14.5M-1994

Honeywell
Sensing and Control

TITLE
SWITCH, BASIC

SIZE	DWG TYPE	DRAWING NAME	REV
B	M	V7-1B29P07-022	3

SCALE 2:1 | WEIGHT | SHEET 1 OF 1