FO-50360-L

CW-B1672

REV	DOCUMENT	CHANGED BY	CHECK
4	0041136	SS 26JUN08	BLR

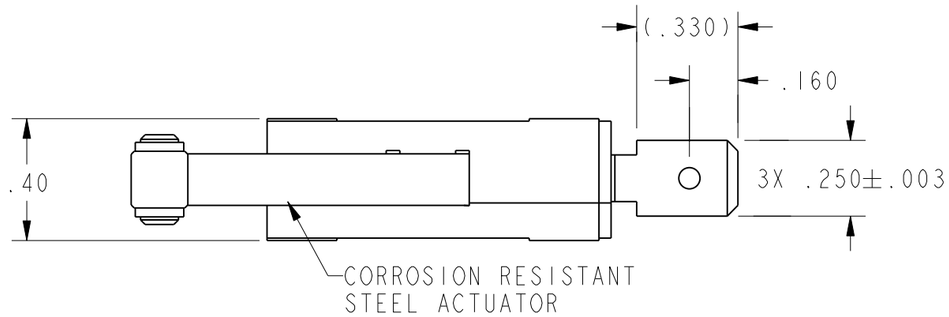

NOTES

1. Ø.19 X .19 WIDE OIL BRONZE ROLLER (CONCENTRICITY .005 FIM)
2. CAUTION: OVERTRAVEL FORCE ON LEVER MUST NOT RESULT IN AN OVERTRAVEL FORCE ON PLUNGER EXCEEDING 5 POUNDS

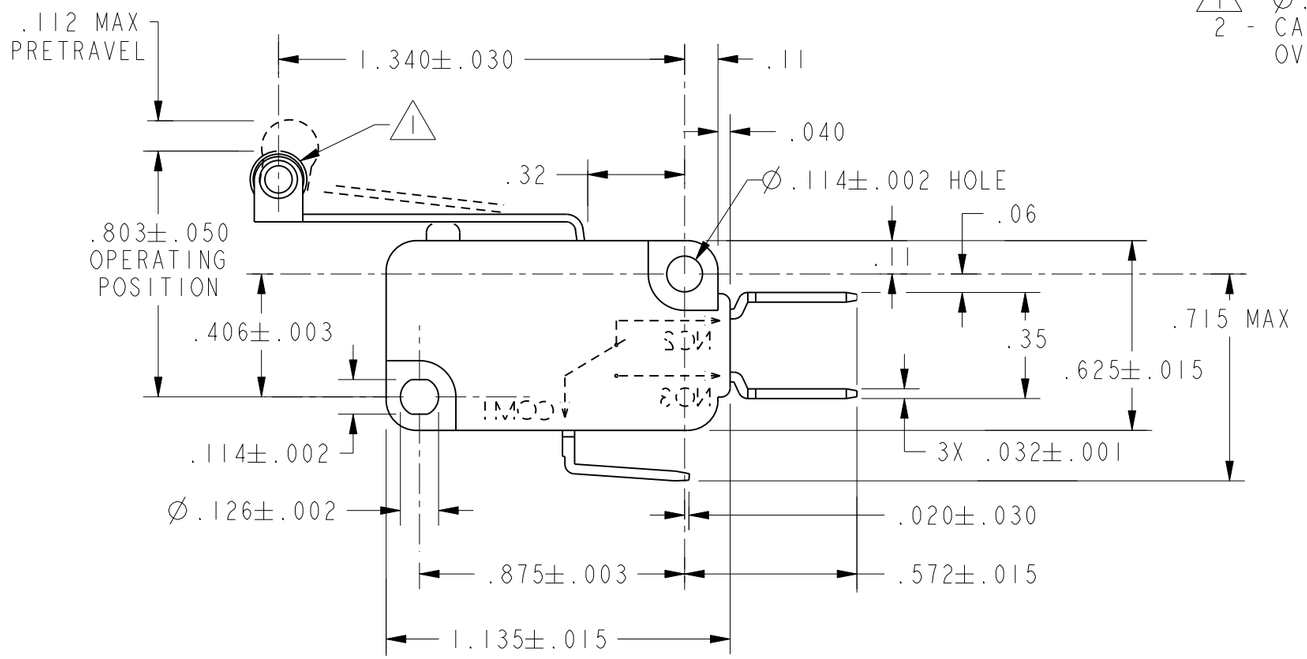

CHARACTERISTICS	
OPERATING FORCE	86 GRAMS MAX
RELEASE FORCE	9 GRAMS MIN
DIFFERENTIAL TRAVEL	.025 MAX
OVERTRAVEL	.064 MIN
RELEASE TRAVEL	.016 MIN

ELECTRICAL DATA

CONTACT ARRANGEMENT
S P D T

L215

15.1A 1/2HP 125, 250 OR 277 VAC
1/2A 125 VDC
1/4A 250 VDC; 5A 125 VAC "L"

UNLESS OTHERWISE SPECIFIED TOLERANCES ARE: [X] US(inch) CUSTOMARY [ ] SI(mm) METRIC

NO PLACE	X	±.040	±1
ONE PLACE	.X	±.030	±0.4
TWO PLACE	.XX	±.015	±0.15
THREE PLACE	.XXX	±.005	±
ANGLES		±	±

RAW MATERIAL-COMMERCIAL STANDARD

THIRD ANGLE PROJECTION

DRAWN	TSM	7FEB03
CHECK	SAV	7FEB03

THIS DRAWING COVERS A PROPRIETARY ITEM AND IS THE PROPERTY OF HONEYWELL. THIS DRAWING IS NOT TO BE COPIED OR USED WITHOUT THE PERMISSION OF HONEYWELL.

DIMENSIONS ARE TO BE MET BEFORE PROTECTIVE COATINGS ARE APPLIED

PTC 2D | ASME Y14.5M-1994

Honeywell

TITLE
SWITCH, BASIC

SIZE	DWG TYPE	DRAWING NAME	REV
B	1	V7-1C17E9-207	4

SCALE 2:1 | WEIGHT | SHEET 1 OF 1