FO-50360-L

CW-B8105

REV	DOCUMENT	CHANGED BY	CHECK
2	202161	LJK 29JAN01	SAV
3	203345	TSM 18JUN01	SAV

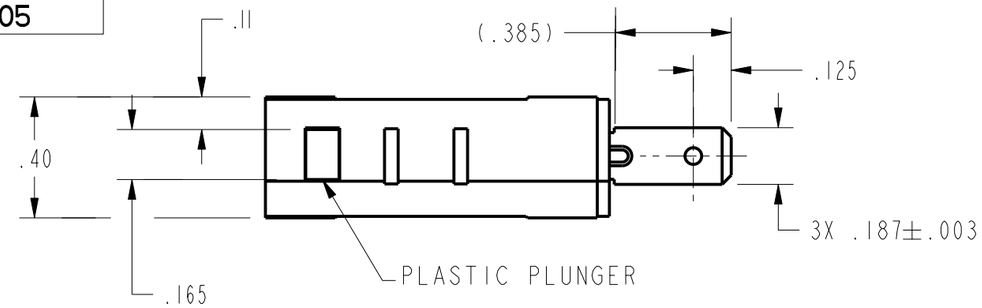

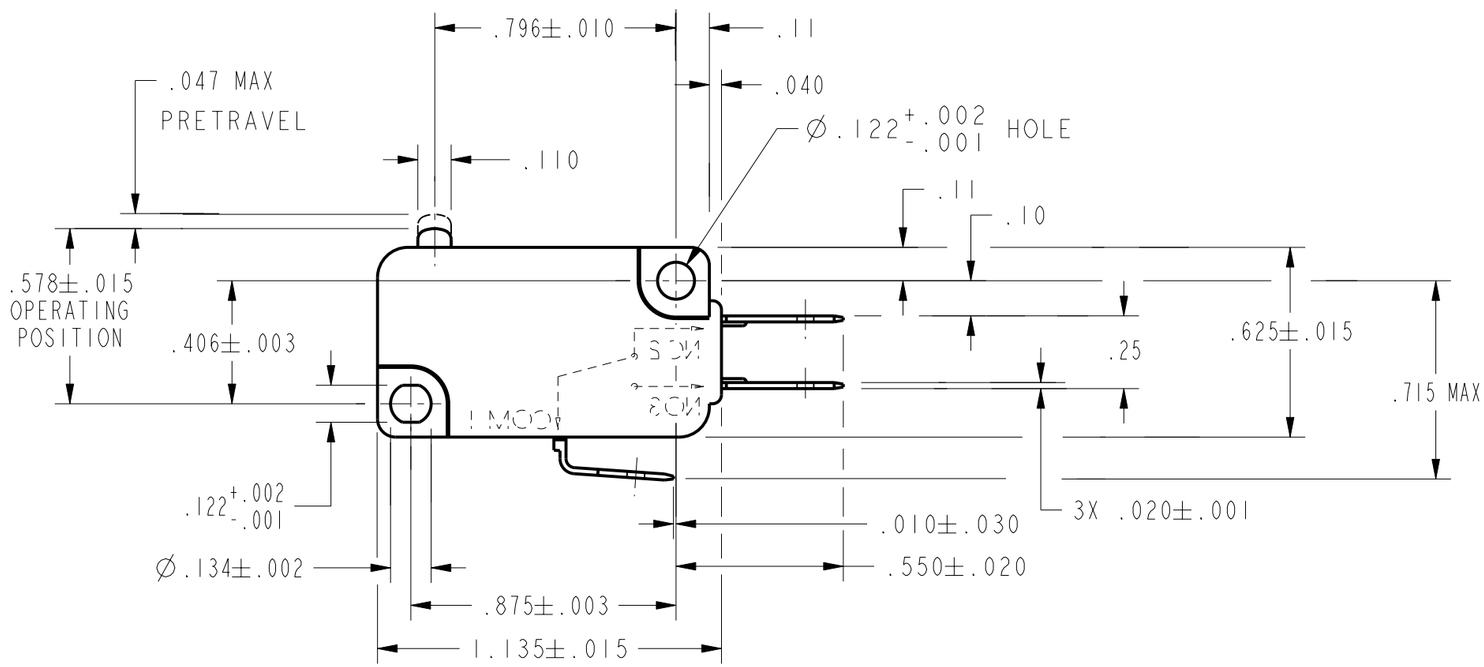

CHARACTERISTICS	
OPERATING FORCE	150 GRAMS MAX
RELEASE FORCE	25 GRAMS MIN
DIFFERENTIAL TRAVEL	.002-.010 MAX
OVERTRAVEL	.050 MIN
FREE POSITION	.625 MAX
RELEASE TRAVEL	.010 MIN

ELECTRICAL DATA

CONTACT ARRANGEMENT
S P D T

L216
10A 1/3HP 125, 250 OR 277 VAC
1/2A 125 VDC
1/4A 250 VDC; 4A 125 VAC "L"

5 (2) ~ 250 T85 1E5 µ

UNLESS OTHERWISE SPECIFIED TOLERANCES ARE: [X] US(inch) CUSTOMARY [ ] SI(mm) METRIC

NO PLACE	X	±.040	±1
ONE PLACE	.X	±.030	±0.4
TWO PLACE	.XX	±.015	±0.15
THREE PLACE	.XXX	±.005	±
ANGLES		±	±

RAW MATERIAL-COMMERCIAL STANDARD

THIRD ANGLE PROJECTION

DRAWN	LJK	29JAN01
CHECK	SAV	29JAN01

THIS DRAWING COVERS A PROPRIETARY ITEM AND IS THE PROPERTY OF HONEYWELL SENSING AND CONTROL. THIS DRAWING IS NOT TO BE COPIED OR USED WITHOUT THE PERMISSION OF HONEYWELL.

DIMENSIONS ARE TO BE MET BEFORE PROTECTIVE COATINGS ARE APPLIED

PTC 2D | ASME Y14.5M-1994

Honeywell
Sensing and Control

TITLE
SWITCH, BASIC

SIZE	DWG TYPE	DRAWING NAME	REV
B	M	V7-1E10D8	3

SCALE NONE | WEIGHT | SHEET 1 OF 1