FO-50360-L

CW-B9945

REV	DOCUMENT	CHANGED BY	CHECK
3	202161	TSM 19JAN01	SAV
4	207443	TSM 17FEB03	SAV

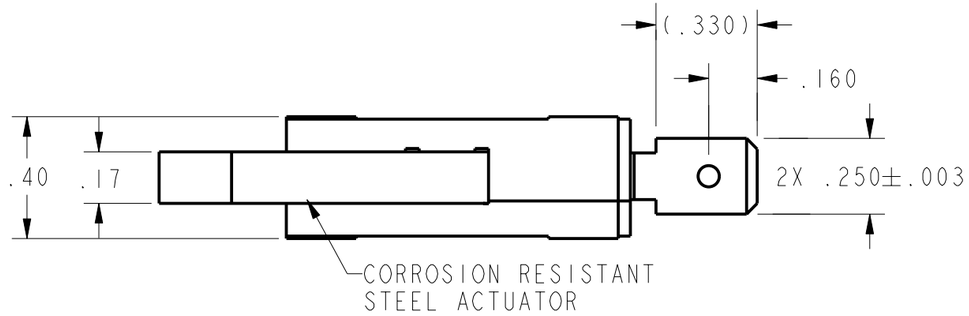

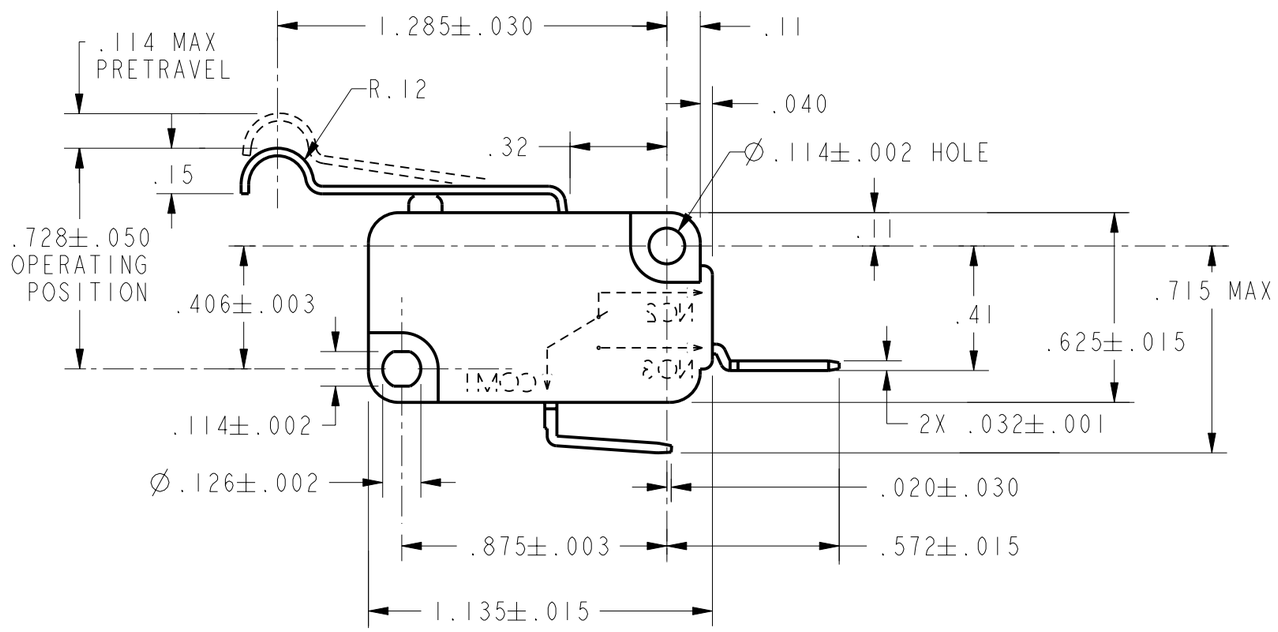

CHARACTERISTICS	
OPERATING FORCE	110 GRAMS MAX
RELEASE FORCE	7 GRAMS MAX
DIFFERENTIAL TRAVEL	.025 MAX
OVERTRAVEL	.064 MIN
RELEASE TRAVEL	.015 MIN

ELECTRICAL DATA

CONTACT ARRANGEMENT
S P N O

21A 1HP 125, 250, 277 VAC
2HP 250, 277 VAC

16 (4) 250 T85 IE5

UNLESS OTHERWISE SPECIFIED TOLERANCES ARE: [X] US(inch) CUSTOMARY [ ] SI(mm) METRIC

NO PLACE	X	±.040	±1
ONE PLACE	.X	±.030	±0.4
TWO PLACE	.XX	±.015	±0.15
THREE PLACE	.XXX	±.005	±
ANGLES		±	±

RAW MATERIAL-COMMERCIAL STANDARD

THIRD ANGLE PROJECTION

DRAWN	TSM	19JAN01
CHECK	SAV	19JAN01

THIS DRAWING COVERS A PROPRIETARY ITEM AND IS THE PROPERTY OF HONEYWELL. THIS DRAWING IS NOT TO BE COPIED OR USED WITHOUT THE PERMISSION OF HONEYWELL.

DIMENSIONS ARE TO BE MET BEFORE PROTECTIVE COATINGS ARE APPLIED

PTC 2D | ASME Y14.5M-1994

Honeywell

TITLE
SWITCH, BASIC

SIZE	DWG TYPE	DRAWING NAME	REV
B	1	V7-1V29E9-263	4

SCALE 2 : 1 | WEIGHT | SHEET 1 OF 1